- **2-kV ESD Protection for:**
  - **LM224K, LM224KA**
  - **LM324K, LM324KA**
  - **LM2902K, LM2902KV, LM2902KAV**
- **Wide Supply Ranges**
  - **Single Supply . . . 3 V to 32 V (26 V for LM2902)**
  - **Dual Supplies . . . ±1.5 V to ±16 V (±13 V for LM2902)**
- **Low Supply-Current Drain Independent of Supply Voltage . . . 0.8 mA Typ**
- **Common-Mode Input Voltage Range Includes Ground, Allowing Direct Sensing Near Ground**
- **Low Input Bias and Offset Parameters**
  - **Input Offset Voltage . . . 3 mV Typ**
    A Versions . . . 2 mV Typ
  - **Input Offset Current . . . 2 nA Typ**
  - **Input Bias Current . . . 20 nA Typ**
    A Versions . . . 15 nA Typ
- **Differential Input Voltage Range Equal to Maximum-Rated Supply Voltage . . . 32 V (26 V for LM2902)**
- **Open-Loop Differential Voltage Amplification . . . 100 V/mV Typ**
- **Internal Frequency Compensation**

LM124 . . . D, J, OR W PACKAGE
LM124A . . . J OR W PACKAGE
LM224, LM224A, LM224K, LM224KA . . . D OR N PACKAGE
LM324, LM324K . . . D, N, NS, OR PW PACKAGE
LM324A . . . D, DB, N, NS, OR PW PACKAGE
LM324KA . . . D, N, NS, OR PW PACKAGE
LM2902 . . . D, N, NS, OR PW PACKAGE
LM2902K . . . D, DB, N, NS, OR PW PACKAGE
LM2902KV, LM2902KAV . . . D OR PW PACKAGE
(TOP VIEW)

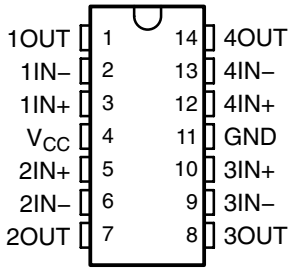

LM124, LM124A . . . FK PACKAGE
(TOP VIEW)

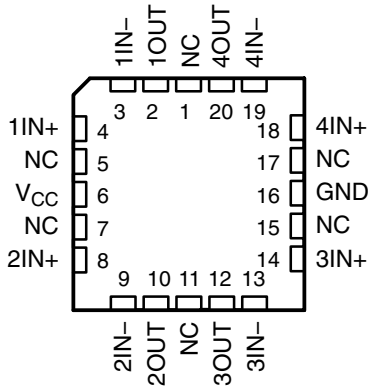

NC – No internal connection

description/ordering information

These devices consist of four independent high-gain frequency-compensated operational amplifiers that are designed specifically to operate from a single supply over a wide range of voltages. Operation from split supplies also is possible if the difference between the two supplies is 3 V to 32 V (3 V to 26 V for the LM2902), and V_{CC} is at least 1.5 V more positive than the input common-mode voltage. The low supply-current drain is independent of the magnitude of the supply voltage.

Applications include transducer amplifiers, dc amplification blocks, and all the conventional operational-amplifier circuits that now can be more easily implemented in single-supply-voltage systems. For example, the LM124 can be operated directly from the standard 5-V supply that is used in digital systems and provides the required interface electronics, without requiring additional ±15-V supplies.

ORDERING INFORMATION†

T_A	V_{IO}max AT 25°C	MAX TESTED V_{CC}	PACKAGE‡		ORDERABLE PART NUMBER	TOP-SIDE MARKING
0°C to 70°C	7 mV	30 V	PDIP (N)	Tube of 25	LM324N	LM324N
					LM324KN	LM324KN
			SOIC (D)	Tube of 50	LM324D	LM324
				Reel of 2500	LM324DR	
				Reel of 2500	LM324DRG3	
				Tube of 50	LM324KD	LM324K
				Reel of 2500	LM324KDR	
			SOP (NS)	Reel of 2000	LM324NSR	LM324
				Tube of 50	LM324KNS	LM324K
				Reel of 2000	LM324KNSR	
			TSSOP (PW)	Tube of 90	LM324PW	L324
				Reel of 2000	LM324PWR	
				Tube of 90	LM324KPW	L324K
				Reel of 2000	LM324KPWR	
	3 mV	30 V	PDIP (N)	Tube of 25	LM324AN	LM324AN
				Tube of 25	LM324KAN	LM324KAN
			SOIC (D)	Tube of 50	LM324AD	LM324A
				Reel of 2500	LM324ADR	
				Tube of 50	LM324KAD	LM324KA
				Reel of 2500	LM324KADR	
			SOP (NS)	Reel of 2000	LM324ANSR	LM324A
				Tube of 50	LM324KANS	LM324KA
				Reel of 2000	LM324KANSR	
			SSOP (DB)	Reel of 2000	LM324ADBR	LM324A
			TSSOP (PW)	Tube of 90	LM324APW	L324A
				Reel of 2000	LM324APWR	
				Tube of 90	LM324KAPW	L324KA
				Reel of 2000	LM324KAPWR	
–25°C to 85°C	5 mV	30 V	PDIP (N)	Tube of 25	LM224N	LM224N
					LM224KN	LM224KN
			SOIC (D)	Tube of 50	LM224D	LM224
				Reel of 2500	LM224DR	
				Tube of 50	LM224KD	LM224K
				Reel of 2500	LM224KDR	
	3 mV	30 V	PDIP (N)	Tube of 25	LM224AN	LM224AN
				Tube of 25	LM224KAN	LM224KAN
			SOIC (D)	Tube of 50	LM224AD	LM224A
				Reel of 2500	LM224ADR	
				Tube of 50	LM224KAD	LM224KA
				Reel of 2500	LM224KADR	

† For the most current package and ordering information, see the Package Option Addendum at the end of this document, or see the TI web site at www.ti.com.
‡ Package drawings, thermal data, and symbolization are available at www.ti.com/packaging.

ORDERING INFORMATION (CONTINUED)

T_A	V_{IO}max AT 25°C	MAX TESTED V_{CC}	PACKAGE†		ORDERABLE PART NUMBER	TOP-SIDE MARKING
–40°C to 125°C	7 mV	26 V	PDIP (N)	Tube of 25	LM2902N	LM2902N
				Tube of 25	LM2902KN	LM2902KN
			SOIC (D)	Tube of 50	LM2902D	LM2902
				Reel of 2500	LM2902DR	
				Tube of 50	LM2902KD	LM2902K
				Reel of 2500	LM2902KDR	
			SOP (NS)	Reel of 2000	LM2902NSR	LM2902
				Tube of 50	LM2902KNS	LM2902K
				Reel of 2000	LM2902KNSR	
			SSOP (DB)	Tube of 80	LM2902KDB	L2902K
				Reel of 2000	LM2902KDBR	
			TSSOP (PW)	Tube of 90	LM2902PW	L2902
				Reel of 2000	LM2902PWR	
				Tube of 90	LM2902KPW	L2902K
				Reel of 2000	LM2902KPWR	
		32 V	SOIC (D)	Reel of 2500	LM2902KVQDR	L2902KV
			TSSOP (PW)	Reel of 2000	LM2902KVQPWR	L2902KV
	2 mV	32 V	SOIC (D)	Reel of 2500	LM2902KAVQDR	L2902KA
			TSSOP (PW)	Reel of 2000	LM2902KAVQPWR	L2902KA
–55°C to 125°C	5 mV	30 V	CDIP (J)	Tube of 25	LM124J	LM124J
			CFP (W)	Tube of 25	LM124W	LM124W
			LCCC (FK)	Tube of 55	LM124FK	LM124FK
			SOIC (D)	Tube of 50	LM124D	LM124
				Reel of 2500	LM124DR	
	2 mV	30 V	CDIP (J)	Tube of 25	LM124AJ	LM124AJ
			CFP (W)	Tube of 25	LM124AW	LM124AW
			LCCC (FK)	Tube of 55	LM124AFK	LM124AFK

† Package drawings, standard packing quantities, thermal data, symbolization, and PCB design guidelines are available at www.ti.com/sc/package.

symbol (each amplifier)

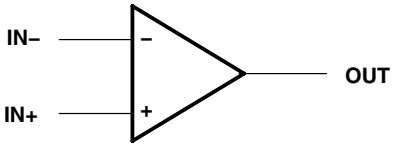

schematic (each amplifier)

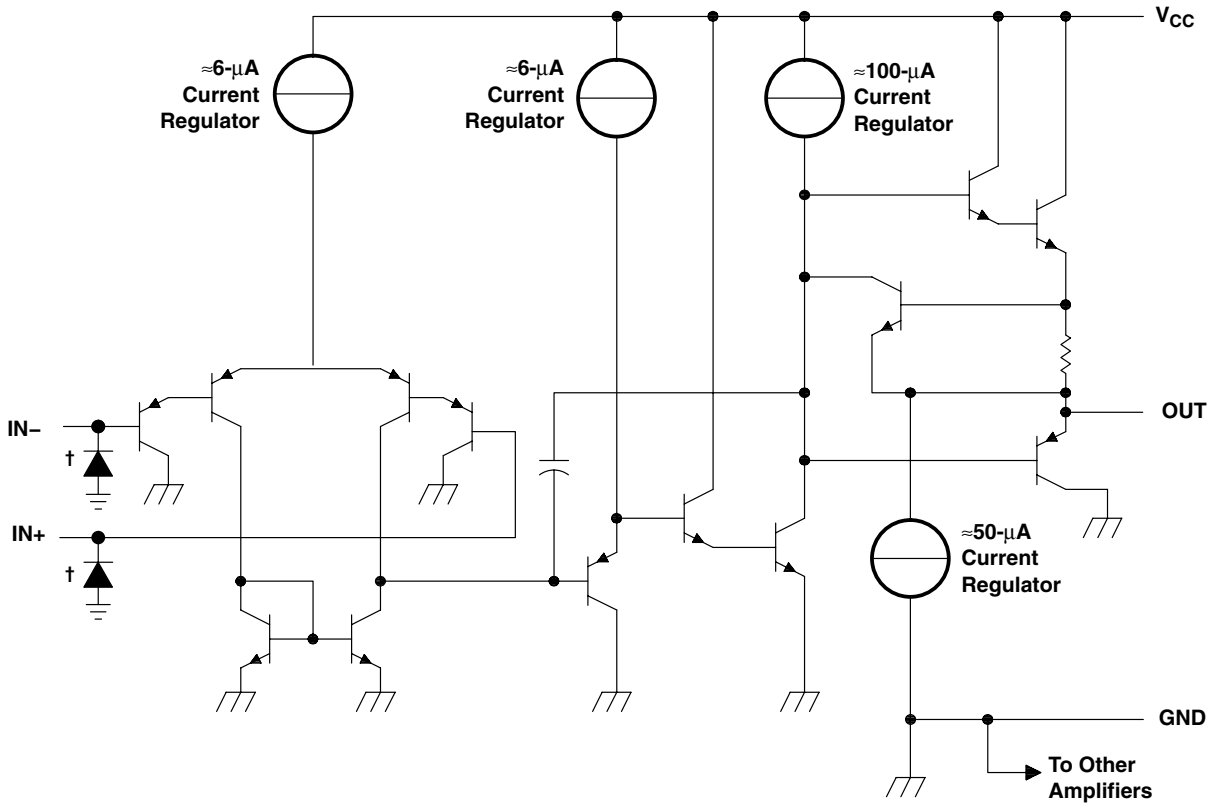

COMPONENT COUNT (total device)	
Epi-FET	1
Transistors	95
Diodes	4
Resistors	11
Capacitors	4

† ESD protection cells - available on LM324K and LM324KA only

absolute maximum ratings over operating free-air temperature range (unless otherwise noted)†

		LM2902	ALL OTHER DEVICES	UNIT
Supply voltage, V_{CC} (see Note 1)		±13 or 26	±16 or 32	V
Differential input voltage, V_{ID} (see Note 2)		±26	±32	V
Input voltage, V_I (either input)		–0.3 to 26	–0.3 to 32	V
Duration of output short circuit (one amplifier) to ground at (or below) $T_A = 25°C$, $V_{CC} \leq 15$ V (see Note 3)		Unlimited	Unlimited	
Package thermal impedance, θ_{JA} (see Notes 4 and 5)	D package	86	86	°C/W
	DB package	96	96	
	N package	80	80	
	NS package	76	76	
	PW package	113	113	
Package thermal impedance, θ_{JC} (see Notes 6 and 7)	FK package		5.61	°C/W
	J package		15.05	
	W package		14.65	
Operating virtual junction temperature, T_J		150	150	°C
Case temperature for 60 seconds	FK package		260	°C
Lead temperature 1,6 mm (1/16 inch) from case for 60 seconds	J or W package	300	300	°C
Storage temperature range, T_{stg}		–65 to 150	–65 to 150	°C

† Stresses beyond those listed under “absolute maximum ratings” may cause permanent damage to the device. These are stress ratings only, and functional operation of the device at these or any other conditions beyond those indicated under “recommended operating conditions” is not implied. Exposure to absolute-maximum-rated conditions for extended periods may affect device reliability.

NOTES:
1. All voltage values (except differential voltages and V_{CC} specified for the measurement of I_{OS}) are with respect to the network GND.
2. Differential voltages are at IN+, with respect to IN–.
3. Short circuits from outputs to V_{CC} can cause excessive heating and eventual destruction.
4. Maximum power dissipation is a function of $T_J(max)$, θ_{JA}, and T_A. The maximum allowable power dissipation at any allowable ambient temperature is $P_D = (T_J(max) - T_A)/\theta_{JA}$. Operating at the absolute maximum T_J of 150°C can affect reliability.
5. The package thermal impedance is calculated in accordance with JESD 51-7.
6. Maximum power dissipation is a function of $T_J(max)$, θ_{JC}, and T_C. The maximum allowable power dissipation at any allowable case temperature is $P_D = (T_J(max) - T_C)/\theta_{JC}$. Operating at the absolute maximum T_J of 150°C can affect reliability.
7. The package thermal impedance is calculated in accordance with MIL-STD-883.

ESD protection

TEST CONDITIONS		TYP	UNIT
Human-Body Model	LM224K, LM224KA, LM324K, LM324KA, LM2902K, LM2902KV, LM2902KAV	±2	kV

electrical characteristics at specified free-air temperature, V_{CC} = 5 V (unless otherwise noted)

PARAMETER		TEST CONDITIONS†		T_A‡	LM124 LM224			LM324 LM324K			UNIT
					MIN	TYP§	MAX	MIN	TYP§	MAX	
V_{IO}	Input offset voltage	V_{CC} = 5 V to MAX, $V_{IC} = V_{ICR}$min, V_O = 1.4 V		25°C		3	5		3	7	mV
				Full range			7			9	
I_{IO}	Input offset current	V_O = 1.4 V		25°C		2	30		2	50	nA
				Full range			100			150	
I_{IB}	Input bias current	V_O = 1.4 V		25°C		–20	–150		–20	–250	nA
				Full range			–300			–500	
V_{ICR}	Common-mode input voltage range	V_{CC} = 5 V to MAX		25°C	0 to V_{CC} – 1.5			0 to V_{CC} – 1.5			V
				Full range	0 to V_{CC} – 2			0 to V_{CC} – 2			
V_{OH}	High-level output voltage	R_L = 2 kΩ		25°C	V_{CC} – 1.5			V_{CC} – 1.5			V
		R_L = 10 kΩ		25°C							
		V_{CC} = MAX	R_L = 2 kΩ	Full range	26			26			
			R_L ≥ 10 kΩ	Full range	27	28		27	28		
V_{OL}	Low-level output voltage	R_L ≤ 10 kΩ		Full range		5	20		5	20	mV
A_{VD}	Large-signal differential voltage amplification	V_{CC} = 15 V, V_O = 1 V to 11 V, R_L ≥ 2 kΩ		25°C	50	100		25	100		V/mV
				Full range	25			15			
CMRR	Common-mode rejection ratio	$V_{IC} = V_{ICR}$min		25°C	70	80		65	80		dB
k_{SVR}	Supply-voltage rejection ratio ($\Delta V_{CC}/\Delta V_{IO}$)			25°C	65	100		65	100		dB
V_{O1}/V_{O2}	Crosstalk attenuation	f = 1 kHz to 20 kHz		25°C		120			120		dB
I_O	Output current	V_{CC} = 15 V, V_{ID} = 1 V, V_O = 0	Source	25°C	–20	–30	–60	–20	–30	–60	mA
				Full range	–10			–10			
		V_{CC} = 15 V, V_{ID} = –1 V, V_O = 15 V	Sink	25°C	10	20		10	20		
				Full range	5			5			
		V_{ID} = –1 V,	V_O = 200 mV	25°C	12	30		12	30		µA
I_{OS}	Short-circuit output current	V_{CC} at 5 V, GND at –5 V	V_O = 0,	25°C		±40	±60		±40	±60	mA
I_{CC}	Supply current (four amplifiers)	V_O = 2.5 V,	No load	Full range		0.7	1.2		0.7	1.2	mA
		V_{CC} = MAX, V_O = 0.5 V_{CC},	No load	Full range		1.4	3		1.4	3	

† All characteristics are measured under open-loop conditions, with zero common-mode input voltage, unless otherwise specified. MAX V_{CC} for testing purposes is 26 V for LM2902 and 30 V for the others.
‡ Full range is –55°C to 125°C for LM124, –25°C to 85°C for LM224, and 0°C to 70°C for LM324.
§ All typical values are at T_A = 25°C.

electrical characteristics at specified free-air temperature, V_{CC} = 5 V (unless otherwise noted)

PARAMETER		TEST CONDITIONS†		T_A‡	LM2902			LM2902V			UNIT
					MIN	TYP§	MAX	MIN	TYP§	MAX	
V_{IO}	Input offset voltage	V_{CC} = 5 V to MAX, $V_{IC} = V_{ICR}$min, V_O = 1.4 V	Non-A-suffix devices	25°C		3	7		3	7	mV
				Full range			10			10	
			A-suffix devices	25°C					1	2	
				Full range						4	
$\Delta V_{IO}/\Delta T$	Input offset voltage temperature drift	R_S = 0 Ω		Full range					7		µV/°C
I_{IO}	Input offset current	V_O = 1.4 V		25°C		2	50		2	50	nA
				Full range			300			150	
$\Delta I_{IO}/\Delta T$	Input offset current temperature drift			Full range					10		pA/°C
I_{IB}	Input bias current	V_O = 1.4 V		25°C		–20	–250		–20	–250	nA
				Full range			–500			–500	
V_{ICR}	Common-mode input voltage range	V_{CC} = 5 V to MAX		25°C	0 to V_{CC} – 1.5			0 to V_{CC} – 1.5			V
				Full range	0 to V_{CC} – 2			0 to V_{CC} – 2			
V_{OH}	High-level output voltage	R_L = 2 kΩ		25°C							V
		R_L = 10 kΩ		25°C	V_{CC} – 1.5			V_{CC} – 1.5			
		V_{CC} = MAX	R_L = 2 kΩ	Full range	22			26			
			R_L ≥ 10 kΩ	Full range	23	24		27			
V_{OL}	Low-level output voltage	R_L ≤ 10 kΩ		Full range		5	20		5	20	mV
A_{VD}	Large-signal differential voltage amplification	V_{CC} = 15 V, V_O = 1 V to 11 V, R_L ≥ 2 kΩ		25°C	25	100		25	100		V/mV
				Full range	15			15			
CMRR	Common-mode rejection ratio	$V_{IC} = V_{ICR}$min		25°C	50	80		60	80		dB
k_{SVR}	Supply-voltage rejection ratio ($\Delta V_{CC}/\Delta V_{IO}$)			25°C	50	100		60	100		dB
V_{O1}/V_{O2}	Crosstalk attenuation	f = 1 kHz to 20 kHz		25°C		120			120		dB
I_O	Output current	V_{CC} = 15 V, V_{ID} = 1 V, V_O = 0	Source	25°C	–20	–30	–60	–20	–30	–60	mA
				Full range	–10			–10			
		V_{CC} = 15 V, V_{ID} = –1 V, V_O = 15 V	Sink	25°C	10	20		10	20		
				Full range	5			5			
		V_{ID} = –1 V,	V_O = 200 mV	25°C		30		12	40		µA
I_{OS}	Short-circuit output current	V_{CC} at 5 V, GND at –5 V	V_O = 0,	25°C		±40	±60		±40	±60	mA
I_{CC}	Supply current (four amplifiers)	V_O = 2.5 V,	No load	Full range		0.7	1.2		0.7	1.2	mA
		V_{CC} = MAX, V_O = 0.5 V_{CC},	No load	Full range		1.4	3		1.4	3	

† All characteristics are measured under open-loop conditions, with zero common-mode input voltage, unless otherwise specified. MAX V_{CC} for testing purposes is 26 V for LM2902 and 32 V for LM2902V.
‡ Full range is –40°C to 125°C for LM2902.
§ All typical values are at T_A = 25°C.

electrical characteristics at specified free-air temperature, V_{CC} = 5 V (unless otherwise noted)

PARAMETER		TEST CONDITIONS†		T_A‡	LM124A			LM224A			LM324A, LM324KA			UNIT
					MIN	TYP§	MAX	MIN	TYP§	MAX	MIN	TYP§	MAX	
V_{IO}	Input offset voltage	V_{CC} = 5 V to 30 V, $V_{IC} = V_{ICR}$min, V_O = 1.4 V		25°C			2		2	3		2	3	mV
				Full range			4			4			5	
I_{IO}	Input offset current	V_O = 1.4 V		25°C			10		2	15		2	30	nA
				Full range			30			30			75	
I_{IB}	Input bias current	V_O = 1.4 V		25°C			–50		–15	–80		–15	–100	nA
				Full range			–100			–100			–200	
V_{ICR}	Common-mode input voltage range	V_{CC} = 30 V		25°C	0 to V_{CC} – 1.5			0 to V_{CC} – 1.5			0 to V_{CC} – 1.5			V
				Full range	0 to V_{CC} – 2			0 to V_{CC} – 2			0 to V_{CC} – 2			
V_{OH}	High-level output voltage	R_L = 2 kΩ		25°C	V_{CC} – 1.5			V_{CC} – 1.5			V_{CC} – 1.5			V
		V_{CC} = 30 V	R_L = 2 kΩ	Full range	26			26			26			
			R_L ≥ 10 kΩ	Full range	27			27	28		27	28		
V_{OL}	Low-level output voltage	R_L ≤ 10 kΩ		Full range			20		5	20		5	20	mV
A_{VD}	Large-signal differential voltage amplification	V_{CC} = 15 V, V_O = 1 V to 11 V, R_L ≥ 2 kΩ		25°C	50	100		50	100		25	100		V/mV
				Full range	25			25			15			
CMRR	Common-mode rejection ratio	$V_{IC} = V_{ICR}$min		25°C	70			70	80		65	80		dB
k_{SVR}	Supply-voltage rejection ratio ($\Delta V_{CC}/\Delta V_{IO}$)			25°C	65			65	100		65	100		dB
V_{O1}/V_{O2}	Crosstalk attenuation	f = 1 kHz to 20 kHz		25°C		120			120			120		dB
I_O	Output current	V_{CC} = 15 V, V_{ID} = 1 V, V_O = 0	Source	25°C	–20			–20	–30	–60	–20	–30	–60	mA
				Full range	–10			–10			–10			
		V_{CC} = 15 V, V_{ID} = –1 V, V_O = 15 V	Sink	25°C	10			10	20		10	20		
				Full range	5			5			5			
		V_{ID} = –1 V,	V_O = 200 mV	25°C	12			12	30		12	30		µA
I_{OS}	Short-circuit output current	V_{CC} at 5 V, GND at –5 V, V_O = 0		25°C		±40	±60		±40	±60		±40	±60	mA
I_{CC}	Supply current (four amplifiers)	V_O = 2.5 V,	No load	Full range		0.7	1.2		0.7	1.2		0.7	1.2	mA
		V_{CC} = 30 V, No load	V_O = 15 V,	Full range		1.4	3		1.4	3		1.4	3	

† All characteristics are measured under open-loop conditions, with zero common-mode input voltage, unless otherwise specified.
‡ Full range is –55°C to 125°C for LM124A, –25°C to 85°C for LM224A, and 0°C to 70°C for LM324A.
§ All typical values are at T_A = 25°C.

operating conditions, V_{CC} = ±15 V, T_A = 25°C

PARAMETER		TEST CONDITIONS	TYP	UNIT
SR	Slew rate at unity gain	R_L = 1 MΩ, C_L = 30 pF, V_I = ±10 V (see Figure 1)	0.5	V/µs
B_1	Unity-gain bandwidth	R_L = 1 MΩ, C_L = 20 pF (see Figure 1)	1.2	MHz
V_n	Equivalent input noise voltage	R_S = 100 Ω, V_I = 0 V, f = 1 kHz (see Figure 2)	35	nV/√Hz

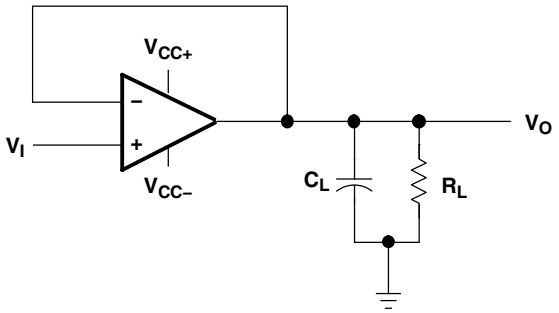

Figure 1. Unity-Gain Amplifier

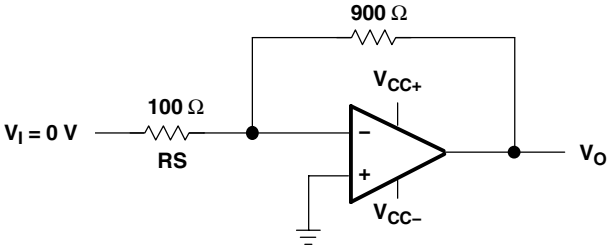

Figure 2. Noise-Test Circuit

PACKAGING INFORMATION

Orderable Device	Status (1)	Package Type	Package Drawing	Pins	Package Qty	Eco Plan (2)	Lead/ Ball Finish	MSL Peak Temp (3)	Samples (Requires Login)
5962-7704301VCA	ACTIVE	CDIP	J	14	1	TBD	A42	N / A for Pkg Type	
5962-9950403V9B	ACTIVE	XCEPT	KGD	0	100	TBD	Call TI	N / A for Pkg Type	
5962-9950403VCA	ACTIVE	CDIP	J	14	1	TBD	A42	N / A for Pkg Type	
77043012A	ACTIVE	LCCC	FK	20	1	TBD	Call TI	Call TI	
7704301CA	ACTIVE	CDIP	J	14	1	TBD	Call TI	Call TI	
7704301DA	ACTIVE	CFP	W	14	1	TBD	Call TI	Call TI	
77043022A	ACTIVE	LCCC	FK	20	1	TBD	Call TI	Call TI	
7704302CA	ACTIVE	CDIP	J	14	1	TBD	Call TI	Call TI	
7704302DA	ACTIVE	CFP	W	14	1	TBD	Call TI	Call TI	
JM38510/11005BCA	ACTIVE	CDIP	J	14	1	TBD	A42	N / A for Pkg Type	
LM124ADR	OBSOLETE	SOIC	D	14		TBD	Call TI	Call TI	
LM124AFKB	ACTIVE	LCCC	FK	20	1	TBD	POST-PLATE	N / A for Pkg Type	
LM124AJ	ACTIVE	CDIP	J	14	1	TBD	A42	N / A for Pkg Type	
LM124AJB	ACTIVE	CDIP	J	14	1	TBD	A42	N / A for Pkg Type	
LM124AWB	ACTIVE	CFP	W	14	1	TBD	A42	N / A for Pkg Type	
LM124D	ACTIVE	SOIC	D	14	50	Green (RoHS & no Sb/Br)	CU NIPDAU	Level-1-260C-UNLIM	
LM124DG4	ACTIVE	SOIC	D	14	50	Green (RoHS & no Sb/Br)	CU NIPDAU	Level-1-260C-UNLIM	
LM124DR	ACTIVE	SOIC	D	14	2500	Green (RoHS & no Sb/Br)	CU NIPDAU	Level-1-260C-UNLIM	
LM124DRG4	ACTIVE	SOIC	D	14	2500	Green (RoHS & no Sb/Br)	CU NIPDAU	Level-1-260C-UNLIM	
LM124FKB	ACTIVE	LCCC	FK	20	1	TBD	POST-PLATE	N / A for Pkg Type	
LM124J	ACTIVE	CDIP	J	14	1	TBD	A42	N / A for Pkg Type	
LM124JB	ACTIVE	CDIP	J	14	1	TBD	A42	N / A for Pkg Type	
LM124N	OBSOLETE	PDIP	N	14		TBD	Call TI	Call TI	
LM124W	ACTIVE	CFP	W	14	1	TBD	A42	N / A for Pkg Type	
LM124WB	ACTIVE	CFP	W	14	1	TBD	A42	N / A for Pkg Type	
LM224AD	ACTIVE	SOIC	D	14	50	Green (RoHS & no Sb/Br)	CU NIPDAU	Level-1-260C-UNLIM	

Orderable Device	Status (1)	Package Type	Package Drawing	Pins	Package Qty	Eco Plan (2)	Lead/ Ball Finish	MSL Peak Temp (3)	Samples (Requires Login)
LM224ADE4	ACTIVE	SOIC	D	14	50	Green (RoHS & no Sb/Br)	CU NIPDAU	Level-1-260C-UNLIM	
LM224ADG4	ACTIVE	SOIC	D	14	50	Green (RoHS & no Sb/Br)	CU NIPDAU	Level-1-260C-UNLIM	
LM224ADR	ACTIVE	SOIC	D	14	2500	Green (RoHS & no Sb/Br)	CU NIPDAU	Level-1-260C-UNLIM	
LM224ADRE4	ACTIVE	SOIC	D	14	2500	Green (RoHS & no Sb/Br)	CU NIPDAU	Level-1-260C-UNLIM	
LM224ADRG4	ACTIVE	SOIC	D	14	2500	Green (RoHS & no Sb/Br)	CU NIPDAU	Level-1-260C-UNLIM	
LM224AN	ACTIVE	PDIP	N	14	25	Pb-Free (RoHS)	CU NIPDAU	N / A for Pkg Type	
LM224ANE4	ACTIVE	PDIP	N	14	25	Pb-Free (RoHS)	CU NIPDAU	N / A for Pkg Type	
LM224D	ACTIVE	SOIC	D	14	50	Green (RoHS & no Sb/Br)	CU NIPDAU	Level-1-260C-UNLIM	
LM224DE4	ACTIVE	SOIC	D	14	50	Green (RoHS & no Sb/Br)	CU NIPDAU	Level-1-260C-UNLIM	
LM224DG4	ACTIVE	SOIC	D	14	50	Green (RoHS & no Sb/Br)	CU NIPDAU	Level-1-260C-UNLIM	
LM224DR	ACTIVE	SOIC	D	14	2500	Green (RoHS & no Sb/Br)	CU NIPDAU	Level-1-260C-UNLIM	
LM224DRE4	ACTIVE	SOIC	D	14	2500	Green (RoHS & no Sb/Br)	CU NIPDAU	Level-1-260C-UNLIM	
LM224DRG3	ACTIVE	SOIC	D	14	2500	Green (RoHS & no Sb/Br)	CU SN	Level-1-260C-UNLIM	
LM224DRG4	ACTIVE	SOIC	D	14	2500	Green (RoHS & no Sb/Br)	CU NIPDAU	Level-1-260C-UNLIM	
LM224KAD	ACTIVE	SOIC	D	14	50	Green (RoHS & no Sb/Br)	CU NIPDAU	Level-1-260C-UNLIM	
LM224KADE4	ACTIVE	SOIC	D	14	50	Green (RoHS & no Sb/Br)	CU NIPDAU	Level-1-260C-UNLIM	
LM224KADG4	ACTIVE	SOIC	D	14	50	Green (RoHS & no Sb/Br)	CU NIPDAU	Level-1-260C-UNLIM	
LM224KADR	ACTIVE	SOIC	D	14	2500	Green (RoHS & no Sb/Br)	CU NIPDAU	Level-1-260C-UNLIM	
LM224KADRE4	ACTIVE	SOIC	D	14	2500	Green (RoHS & no Sb/Br)	CU NIPDAU	Level-1-260C-UNLIM	

Orderable Device	Status (1)	Package Type	Package Drawing	Pins	Package Qty	Eco Plan (2)	Lead/ Ball Finish	MSL Peak Temp (3)	Samples (Requires Login)
LM224KADRG4	ACTIVE	SOIC	D	14	2500	Green (RoHS & no Sb/Br)	CU NIPDAU	Level-1-260C-UNLIM	
LM224KAN	ACTIVE	PDIP	N	14	25	Pb-Free (RoHS)	CU NIPDAU	N / A for Pkg Type	
LM224KANE4	ACTIVE	PDIP	N	14	25	Pb-Free (RoHS)	CU NIPDAU	N / A for Pkg Type	
LM224KD	ACTIVE	SOIC	D	14	50	Green (RoHS & no Sb/Br)	CU NIPDAU	Level-1-260C-UNLIM	
LM224KDE4	ACTIVE	SOIC	D	14	50	Green (RoHS & no Sb/Br)	CU NIPDAU	Level-1-260C-UNLIM	
LM224KDG4	ACTIVE	SOIC	D	14	50	Green (RoHS & no Sb/Br)	CU NIPDAU	Level-1-260C-UNLIM	
LM224KDR	ACTIVE	SOIC	D	14	2500	Green (RoHS & no Sb/Br)	CU NIPDAU	Level-1-260C-UNLIM	
LM224KDRE4	ACTIVE	SOIC	D	14	2500	Green (RoHS & no Sb/Br)	CU NIPDAU	Level-1-260C-UNLIM	
LM224KDRG4	ACTIVE	SOIC	D	14	2500	Green (RoHS & no Sb/Br)	CU NIPDAU	Level-1-260C-UNLIM	
LM224KN	ACTIVE	PDIP	N	14	25	Pb-Free (RoHS)	CU NIPDAU	N / A for Pkg Type	
LM224KNE4	ACTIVE	PDIP	N	14	25	Pb-Free (RoHS)	CU NIPDAU	N / A for Pkg Type	
LM224N	ACTIVE	PDIP	N	14	25	Pb-Free (RoHS)	CU NIPDAU	N / A for Pkg Type	
LM224NE4	ACTIVE	PDIP	N	14	25	Pb-Free (RoHS)	CU NIPDAU	N / A for Pkg Type	
LM2902D	ACTIVE	SOIC	D	14	50	Green (RoHS & no Sb/Br)	CU NIPDAU	Level-1-260C-UNLIM	
LM2902DE4	ACTIVE	SOIC	D	14	50	Green (RoHS & no Sb/Br)	CU NIPDAU	Level-1-260C-UNLIM	
LM2902DG4	ACTIVE	SOIC	D	14	50	Green (RoHS & no Sb/Br)	CU NIPDAU	Level-1-260C-UNLIM	
LM2902DR	ACTIVE	SOIC	D	14	2500	Green (RoHS & no Sb/Br)	CU NIPDAU	Level-1-260C-UNLIM	
LM2902DRE4	ACTIVE	SOIC	D	14	2500	Green (RoHS & no Sb/Br)	CU NIPDAU	Level-1-260C-UNLIM	
LM2902DRG3	ACTIVE	SOIC	D	14	2500	Green (RoHS & no Sb/Br)	CU SN	Level-1-260C-UNLIM	
LM2902DRG4	ACTIVE	SOIC	D	14	2500	Green (RoHS & no Sb/Br)	CU NIPDAU	Level-1-260C-UNLIM	

Orderable Device	Status (1)	Package Type	Package Drawing	Pins	Package Qty	Eco Plan (2)	Lead/ Ball Finish	MSL Peak Temp (3)	Samples (Requires Login)
LM2902KAVQDR	ACTIVE	SOIC	D	14	2500	Green (RoHS & no Sb/Br)	CU NIPDAU	Level-1-260C-UNLIM	
LM2902KAVQDRG4	ACTIVE	SOIC	D	14	2500	Green (RoHS & no Sb/Br)	CU NIPDAU	Level-1-260C-UNLIM	
LM2902KAVQPWR	ACTIVE	TSSOP	PW	14	2000	Green (RoHS & no Sb/Br)	CU NIPDAU	Level-1-260C-UNLIM	
LM2902KAVQPWRG4	ACTIVE	TSSOP	PW	14	2000	Green (RoHS & no Sb/Br)	CU NIPDAU	Level-1-260C-UNLIM	
LM2902KD	ACTIVE	SOIC	D	14	50	Green (RoHS & no Sb/Br)	CU NIPDAU	Level-1-260C-UNLIM	
LM2902KDB	ACTIVE	SSOP	DB	14	80	Green (RoHS & no Sb/Br)	CU NIPDAU	Level-1-260C-UNLIM	
LM2902KDBE4	ACTIVE	SSOP	DB	14	80	Green (RoHS & no Sb/Br)	CU NIPDAU	Level-1-260C-UNLIM	
LM2902KDBG4	ACTIVE	SSOP	DB	14	80	Green (RoHS & no Sb/Br)	CU NIPDAU	Level-1-260C-UNLIM	
LM2902KDE4	ACTIVE	SOIC	D	14	50	Green (RoHS & no Sb/Br)	CU NIPDAU	Level-1-260C-UNLIM	
LM2902KDG4	ACTIVE	SOIC	D	14	50	Green (RoHS & no Sb/Br)	CU NIPDAU	Level-1-260C-UNLIM	
LM2902KDR	ACTIVE	SOIC	D	14	2500	Green (RoHS & no Sb/Br)	CU NIPDAU	Level-1-260C-UNLIM	
LM2902KDRE4	ACTIVE	SOIC	D	14	2500	Green (RoHS & no Sb/Br)	CU NIPDAU	Level-1-260C-UNLIM	
LM2902KDRG4	ACTIVE	SOIC	D	14	2500	Green (RoHS & no Sb/Br)	CU NIPDAU	Level-1-260C-UNLIM	
LM2902KN	ACTIVE	PDIP	N	14	25	Pb-Free (RoHS)	CU NIPDAU	N / A for Pkg Type	
LM2902KNE4	ACTIVE	PDIP	N	14	25	Pb-Free (RoHS)	CU NIPDAU	N / A for Pkg Type	
LM2902KNSR	ACTIVE	SO	NS	14	2000	Green (RoHS & no Sb/Br)	CU NIPDAU	Level-1-260C-UNLIM	
LM2902KNSRE4	ACTIVE	SO	NS	14	2000	Green (RoHS & no Sb/Br)	CU NIPDAU	Level-1-260C-UNLIM	
LM2902KNSRG4	ACTIVE	SO	NS	14	2000	Green (RoHS & no Sb/Br)	CU NIPDAU	Level-1-260C-UNLIM	
LM2902KPW	ACTIVE	TSSOP	PW	14	90	Green (RoHS & no Sb/Br)	CU NIPDAU	Level-1-260C-UNLIM	

Orderable Device	Status (1)	Package Type	Package Drawing	Pins	Package Qty	Eco Plan (2)	Lead/ Ball Finish	MSL Peak Temp (3)	Samples (Requires Login)
LM2902KPWE4	ACTIVE	TSSOP	PW	14	90	Green (RoHS & no Sb/Br)	CU NIPDAU	Level-1-260C-UNLIM	
LM2902KPWG4	ACTIVE	TSSOP	PW	14	90	Green (RoHS & no Sb/Br)	CU NIPDAU	Level-1-260C-UNLIM	
LM2902KPWR	ACTIVE	TSSOP	PW	14	2000	Green (RoHS & no Sb/Br)	CU NIPDAU	Level-1-260C-UNLIM	
LM2902KPWRE4	ACTIVE	TSSOP	PW	14	2000	Green (RoHS & no Sb/Br)	CU NIPDAU	Level-1-260C-UNLIM	
LM2902KPWRG4	ACTIVE	TSSOP	PW	14	2000	Green (RoHS & no Sb/Br)	CU NIPDAU	Level-1-260C-UNLIM	
LM2902KVQDR	ACTIVE	SOIC	D	14	2500	Green (RoHS & no Sb/Br)	CU NIPDAU	Level-1-260C-UNLIM	
LM2902KVQDRG4	ACTIVE	SOIC	D	14	2500	Green (RoHS & no Sb/Br)	CU NIPDAU	Level-1-260C-UNLIM	
LM2902KVQPWR	ACTIVE	TSSOP	PW	14	2000	Green (RoHS & no Sb/Br)	CU NIPDAU	Level-1-260C-UNLIM	
LM2902KVQPWRG4	ACTIVE	TSSOP	PW	14	2000	Green (RoHS & no Sb/Br)	CU NIPDAU	Level-1-260C-UNLIM	
LM2902N	ACTIVE	PDIP	N	14	25	Pb-Free (RoHS)	CU NIPDAU	N / A for Pkg Type	
LM2902NE4	ACTIVE	PDIP	N	14	25	Pb-Free (RoHS)	CU NIPDAU	N / A for Pkg Type	
LM2902NSR	ACTIVE	SO	NS	14	2000	Green (RoHS & no Sb/Br)	CU NIPDAU	Level-1-260C-UNLIM	
LM2902NSRG4	ACTIVE	SO	NS	14	2000	Green (RoHS & no Sb/Br)	CU NIPDAU	Level-1-260C-UNLIM	
LM2902PW	ACTIVE	TSSOP	PW	14	90	Green (RoHS & no Sb/Br)	CU NIPDAU	Level-1-260C-UNLIM	
LM2902PWE4	ACTIVE	TSSOP	PW	14	90	Green (RoHS & no Sb/Br)	CU NIPDAU	Level-1-260C-UNLIM	
LM2902PWG4	ACTIVE	TSSOP	PW	14	90	Green (RoHS & no Sb/Br)	CU NIPDAU	Level-1-260C-UNLIM	
LM2902PWLE	OBSOLETE	TSSOP	PW	14		TBD	Call TI	Call TI	
LM2902PWR	ACTIVE	TSSOP	PW	14	2000	Green (RoHS & no Sb/Br)	CU NIPDAU	Level-1-260C-UNLIM	
LM2902PWRE4	ACTIVE	TSSOP	PW	14		Green (RoHS & no Sb/Br)	CU NIPDAU	Level-1-260C-UNLIM	

Orderable Device	Status (1)	Package Type	Package Drawing	Pins	Package Qty	Eco Plan (2)	Lead/ Ball Finish	MSL Peak Temp (3)	Samples (Requires Login)
LM2902PWRG3	ACTIVE	TSSOP	PW	14	2000	Green (RoHS & no Sb/Br)	CU SN	Level-1-260C-UNLIM	
LM2902PWRG4	ACTIVE	TSSOP	PW	14	2000	Green (RoHS & no Sb/Br)	CU NIPDAU	Level-1-260C-UNLIM	
LM2902QN	OBSOLETE	PDIP	N	14		TBD	Call TI	Call TI	
LM324AD	ACTIVE	SOIC	D	14	50	Green (RoHS & no Sb/Br)	CU NIPDAU	Level-1-260C-UNLIM	
LM324ADBLE	OBSOLETE	SSOP	DB	14		TBD	Call TI	Call TI	
LM324ADBR	ACTIVE	SSOP	DB	14	2000	Green (RoHS & no Sb/Br)	CU NIPDAU	Level-1-260C-UNLIM	
LM324ADBRE4	ACTIVE	SSOP	DB	14	2000	Green (RoHS & no Sb/Br)	CU NIPDAU	Level-1-260C-UNLIM	
LM324ADBRG4	ACTIVE	SSOP	DB	14	2000	Green (RoHS & no Sb/Br)	CU NIPDAU	Level-1-260C-UNLIM	
LM324ADE4	ACTIVE	SOIC	D	14	50	Green (RoHS & no Sb/Br)	CU NIPDAU	Level-1-260C-UNLIM	
LM324ADG4	ACTIVE	SOIC	D	14	50	Green (RoHS & no Sb/Br)	CU NIPDAU	Level-1-260C-UNLIM	
LM324ADR	ACTIVE	SOIC	D	14	2500	Green (RoHS & no Sb/Br)	CU NIPDAU	Level-1-260C-UNLIM	
LM324ADRE4	ACTIVE	SOIC	D	14	2500	Green (RoHS & no Sb/Br)	CU NIPDAU	Level-1-260C-UNLIM	
LM324ADRG4	ACTIVE	SOIC	D	14	2500	Green (RoHS & no Sb/Br)	CU NIPDAU	Level-1-260C-UNLIM	
LM324AN	ACTIVE	PDIP	N	14	25	Pb-Free (RoHS)	CU NIPDAU	N / A for Pkg Type	
LM324ANE4	ACTIVE	PDIP	N	14	25	Pb-Free (RoHS)	CU NIPDAU	N / A for Pkg Type	
LM324ANSR	ACTIVE	SO	NS	14	2000	Green (RoHS & no Sb/Br)	CU NIPDAU	Level-1-260C-UNLIM	
LM324ANSRE4	ACTIVE	SO	NS	14	2000	Green (RoHS & no Sb/Br)	CU NIPDAU	Level-1-260C-UNLIM	
LM324ANSRG4	ACTIVE	SO	NS	14	2000	Green (RoHS & no Sb/Br)	CU NIPDAU	Level-1-260C-UNLIM	
LM324APW	ACTIVE	TSSOP	PW	14	90	Green (RoHS & no Sb/Br)	CU NIPDAU	Level-1-260C-UNLIM	

Orderable Device	Status (1)	Package Type	Package Drawing	Pins	Package Qty	Eco Plan (2)	Lead/ Ball Finish	MSL Peak Temp (3)	Samples (Requires Login)
LM324APWE4	ACTIVE	TSSOP	PW	14	90	Green (RoHS & no Sb/Br)	CU NIPDAU	Level-1-260C-UNLIM	
LM324APWG4	ACTIVE	TSSOP	PW	14	90	Green (RoHS & no Sb/Br)	CU NIPDAU	Level-1-260C-UNLIM	
LM324APWLE	OBSOLETE	TSSOP	PW	14		TBD	Call TI	Call TI	
LM324APWR	ACTIVE	TSSOP	PW	14	2000	Green (RoHS & no Sb/Br)	CU NIPDAU	Level-1-260C-UNLIM	
LM324APWRE4	ACTIVE	TSSOP	PW	14	2000	Green (RoHS & no Sb/Br)	CU NIPDAU	Level-1-260C-UNLIM	
LM324APWRG4	ACTIVE	TSSOP	PW	14	2000	Green (RoHS & no Sb/Br)	CU NIPDAU	Level-1-260C-UNLIM	
LM324D	ACTIVE	SOIC	D	14	50	Green (RoHS & no Sb/Br)	CU NIPDAU	Level-1-260C-UNLIM	
LM324DE4	ACTIVE	SOIC	D	14	50	Green (RoHS & no Sb/Br)	CU NIPDAU	Level-1-260C-UNLIM	
LM324DG4	ACTIVE	SOIC	D	14	50	Green (RoHS & no Sb/Br)	CU NIPDAU	Level-1-260C-UNLIM	
LM324DR	ACTIVE	SOIC	D	14	2500	Green (RoHS & no Sb/Br)	CU NIPDAU	Level-1-260C-UNLIM	
LM324DRE4	ACTIVE	SOIC	D	14	2500	Green (RoHS & no Sb/Br)	CU NIPDAU	Level-1-260C-UNLIM	
LM324DRG3	ACTIVE	SOIC	D	14	2500	Green (RoHS & no Sb/Br)	CU SN	Level-1-260C-UNLIM	
LM324DRG4	ACTIVE	SOIC	D	14	2500	Green (RoHS & no Sb/Br)	CU NIPDAU	Level-1-260C-UNLIM	
LM324KAD	ACTIVE	SOIC	D	14	50	Green (RoHS & no Sb/Br)	CU NIPDAU	Level-1-260C-UNLIM	
LM324KADE4	ACTIVE	SOIC	D	14	50	Green (RoHS & no Sb/Br)	CU NIPDAU	Level-1-260C-UNLIM	
LM324KADG4	ACTIVE	SOIC	D	14	50	Green (RoHS & no Sb/Br)	CU NIPDAU	Level-1-260C-UNLIM	
LM324KADR	ACTIVE	SOIC	D	14	2500	Green (RoHS & no Sb/Br)	CU NIPDAU	Level-1-260C-UNLIM	
LM324KADRE4	ACTIVE	SOIC	D	14	2500	Green (RoHS & no Sb/Br)	CU NIPDAU	Level-1-260C-UNLIM	

Orderable Device	Status (1)	Package Type	Package Drawing	Pins	Package Qty	Eco Plan (2)	Lead/ Ball Finish	MSL Peak Temp (3)	Samples (Requires Login)
LM324KADRG4	ACTIVE	SOIC	D	14	2500	Green (RoHS & no Sb/Br)	CU NIPDAU	Level-1-260C-UNLIM	
LM324KAN	ACTIVE	PDIP	N	14	25	Pb-Free (RoHS)	CU NIPDAU	N / A for Pkg Type	
LM324KANE4	ACTIVE	PDIP	N	14	25	Pb-Free (RoHS)	CU NIPDAU	N / A for Pkg Type	
LM324KANSR	ACTIVE	SO	NS	14	2000	Green (RoHS & no Sb/Br)	CU NIPDAU	Level-1-260C-UNLIM	
LM324KANSRE4	ACTIVE	SO	NS	14	2000	Green (RoHS & no Sb/Br)	CU NIPDAU	Level-1-260C-UNLIM	
LM324KANSRG4	ACTIVE	SO	NS	14	2000	Green (RoHS & no Sb/Br)	CU NIPDAU	Level-1-260C-UNLIM	
LM324KAPW	ACTIVE	TSSOP	PW	14	90	Green (RoHS & no Sb/Br)	CU NIPDAU	Level-1-260C-UNLIM	
LM324KAPWE4	ACTIVE	TSSOP	PW	14	90	Green (RoHS & no Sb/Br)	CU NIPDAU	Level-1-260C-UNLIM	
LM324KAPWG4	ACTIVE	TSSOP	PW	14	90	Green (RoHS & no Sb/Br)	CU NIPDAU	Level-1-260C-UNLIM	
LM324KAPWR	ACTIVE	TSSOP	PW	14	2000	Green (RoHS & no Sb/Br)	CU NIPDAU	Level-1-260C-UNLIM	
LM324KAPWRE4	ACTIVE	TSSOP	PW	14	2000	Green (RoHS & no Sb/Br)	CU NIPDAU	Level-1-260C-UNLIM	
LM324KAPWRG4	ACTIVE	TSSOP	PW	14	2000	Green (RoHS & no Sb/Br)	CU NIPDAU	Level-1-260C-UNLIM	
LM324KD	ACTIVE	SOIC	D	14	50	Green (RoHS & no Sb/Br)	CU NIPDAU	Level-1-260C-UNLIM	
LM324KDE4	ACTIVE	SOIC	D	14	50	Green (RoHS & no Sb/Br)	CU NIPDAU	Level-1-260C-UNLIM	
LM324KDG4	ACTIVE	SOIC	D	14	50	Green (RoHS & no Sb/Br)	CU NIPDAU	Level-1-260C-UNLIM	
LM324KDR	ACTIVE	SOIC	D	14	2500	Green (RoHS & no Sb/Br)	CU NIPDAU	Level-1-260C-UNLIM	
LM324KDRE4	ACTIVE	SOIC	D	14	2500	Green (RoHS & no Sb/Br)	CU NIPDAU	Level-1-260C-UNLIM	
LM324KDRG4	ACTIVE	SOIC	D	14	2500	Green (RoHS & no Sb/Br)	CU NIPDAU	Level-1-260C-UNLIM	
LM324KN	ACTIVE	PDIP	N	14	25	Pb-Free (RoHS)	CU NIPDAU	N / A for Pkg Type	

Orderable Device	Status (1)	Package Type	Package Drawing	Pins	Package Qty	Eco Plan (2)	Lead/ Ball Finish	MSL Peak Temp (3)	Samples (Requires Login)
LM324KNE4	ACTIVE	PDIP	N	14	25	Pb-Free (RoHS)	CU NIPDAU	N / A for Pkg Type	
LM324KNSR	ACTIVE	SO	NS	14	2000	Green (RoHS & no Sb/Br)	CU NIPDAU	Level-1-260C-UNLIM	
LM324KNSRE4	ACTIVE	SO	NS	14	2000	Green (RoHS & no Sb/Br)	CU NIPDAU	Level-1-260C-UNLIM	
LM324KNSRG4	ACTIVE	SO	NS	14	2000	Green (RoHS & no Sb/Br)	CU NIPDAU	Level-1-260C-UNLIM	
LM324KPW	ACTIVE	TSSOP	PW	14	90	Green (RoHS & no Sb/Br)	CU NIPDAU	Level-1-260C-UNLIM	
LM324KPWE4	ACTIVE	TSSOP	PW	14	90	Green (RoHS & no Sb/Br)	CU NIPDAU	Level-1-260C-UNLIM	
LM324KPWG4	ACTIVE	TSSOP	PW	14	90	Green (RoHS & no Sb/Br)	CU NIPDAU	Level-1-260C-UNLIM	
LM324KPWR	ACTIVE	TSSOP	PW	14	2000	Green (RoHS & no Sb/Br)	CU NIPDAU	Level-1-260C-UNLIM	
LM324KPWRE4	ACTIVE	TSSOP	PW	14	2000	Green (RoHS & no Sb/Br)	CU NIPDAU	Level-1-260C-UNLIM	
LM324KPWRG4	ACTIVE	TSSOP	PW	14	2000	Green (RoHS & no Sb/Br)	CU NIPDAU	Level-1-260C-UNLIM	
LM324N	ACTIVE	PDIP	N	14	25	Pb-Free (RoHS)	CU NIPDAU	N / A for Pkg Type	
LM324NE3	ACTIVE	PDIP	N	14	25	Pb-Free (RoHS)	CU SN	N / A for Pkg Type	
LM324NE4	ACTIVE	PDIP	N	14	25	Pb-Free (RoHS)	CU NIPDAU	N / A for Pkg Type	
LM324NSR	ACTIVE	SO	NS	14	2000	Green (RoHS & no Sb/Br)	CU NIPDAU	Level-1-260C-UNLIM	
LM324NSRE4	ACTIVE	SO	NS	14	2000	Green (RoHS & no Sb/Br)	CU NIPDAU	Level-1-260C-UNLIM	
LM324NSRG4	ACTIVE	SO	NS	14	2000	Green (RoHS & no Sb/Br)	CU NIPDAU	Level-1-260C-UNLIM	
LM324PW	ACTIVE	TSSOP	PW	14	90	Green (RoHS & no Sb/Br)	CU NIPDAU	Level-1-260C-UNLIM	
LM324PWE4	ACTIVE	TSSOP	PW	14	90	Green (RoHS & no Sb/Br)	CU NIPDAU	Level-1-260C-UNLIM	
LM324PWG4	ACTIVE	TSSOP	PW	14	90	Green (RoHS & no Sb/Br)	CU NIPDAU	Level-1-260C-UNLIM	
LM324PWLE	OBSOLETE	TSSOP	PW	14		TBD	Call TI	Call TI	

Orderable Device	Status (1)	Package Type	Package Drawing	Pins	Package Qty	Eco Plan (2)	Lead/ Ball Finish	MSL Peak Temp (3)	Samples (Requires Login)
LM324PWR	ACTIVE	TSSOP	PW	14	2000	Green (RoHS & no Sb/Br)	CU NIPDAU	Level-1-260C-UNLIM	
LM324PWRE4	ACTIVE	TSSOP	PW	14	2000	Green (RoHS & no Sb/Br)	CU NIPDAU	Level-1-260C-UNLIM	
LM324PWRG3	ACTIVE	TSSOP	PW	14	2000	Green (RoHS & no Sb/Br)	CU SN	Level-1-260C-UNLIM	
LM324PWRG4	ACTIVE	TSSOP	PW	14	2000	Green (RoHS & no Sb/Br)	CU NIPDAU	Level-1-260C-UNLIM	
LM324Y	OBSOLETE	DIESALE	Y	0		TBD	Call TI	Call TI	
M38510/11005BCA	ACTIVE	CDIP	J	14	1	TBD	A42	N / A for Pkg Type	

(1) The marketing status values are defined as follows:
ACTIVE: Product device recommended for new designs.
LIFEBUY: TI has announced that the device will be discontinued, and a lifetime-buy period is in effect.
NRND: Not recommended for new designs. Device is in production to support existing customers, but TI does not recommend using this part in a new design.
PREVIEW: Device has been announced but is not in production. Samples may or may not be available.
OBSOLETE: TI has discontinued the production of the device.

(2) Eco Plan - The planned eco-friendly classification: Pb-Free (RoHS), Pb-Free (RoHS Exempt), or Green (RoHS & no Sb/Br) - please check http://www.ti.com/productcontent for the latest availability information and additional product content details.
TBD: The Pb-Free/Green conversion plan has not been defined.
Pb-Free (RoHS): TI's terms "Lead-Free" or "Pb-Free" mean semiconductor products that are compatible with the current RoHS requirements for all 6 substances, including the requirement that lead not exceed 0.1% by weight in homogeneous materials. Where designed to be soldered at high temperatures, TI Pb-Free products are suitable for use in specified lead-free processes.
Pb-Free (RoHS Exempt): This component has a RoHS exemption for either 1) lead-based flip-chip solder bumps used between the die and package, or 2) lead-based die adhesive used between the die and leadframe. The component is otherwise considered Pb-Free (RoHS compatible) as defined above.
Green (RoHS & no Sb/Br): TI defines "Green" to mean Pb-Free (RoHS compatible), and free of Bromine (Br) and Antimony (Sb) based flame retardants (Br or Sb do not exceed 0.1% by weight in homogeneous material)

(3) MSL, Peak Temp. -- The Moisture Sensitivity Level rating according to the JEDEC industry standard classifications, and peak solder temperature.

OTHER QUALIFIED VERSIONS OF LM124, LM124-SP, LM124M, LM2902 :

- Catalog: LM124, LM124
- Automotive: LM2902-Q1
- Enhanced Product: LM2902-EP
- Military: LM124M, LM124M
- Space: LM124-SP, LM124-SP

NOTE: Qualified Version Definitions:

- Catalog - TI's standard catalog product
- Automotive - Q100 devices qualified for high-reliability automotive applications targeting zero defects
- Enhanced Product - Supports Defense, Aerospace and Medical Applications
- Military - QML certified for Military and Defense Applications
- Space - Radiation tolerant, ceramic packaging and qualified for use in Space-based application

TAPE AND REEL INFORMATION

REEL DIMENSIONS

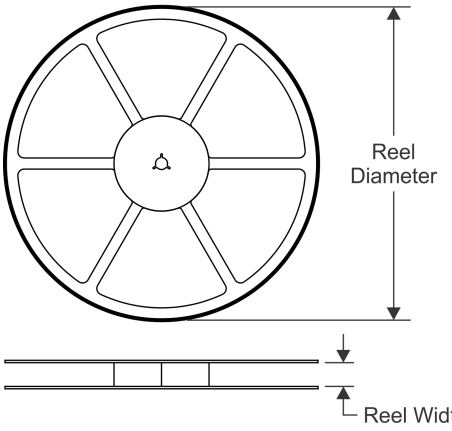

TAPE DIMENSIONS

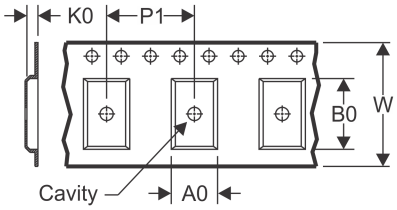

A0	Dimension designed to accommodate the component width
B0	Dimension designed to accommodate the component length
K0	Dimension designed to accommodate the component thickness
W	Overall width of the carrier tape
P1	Pitch between successive cavity centers

QUADRANT ASSIGNMENTS FOR PIN 1 ORIENTATION IN TAPE

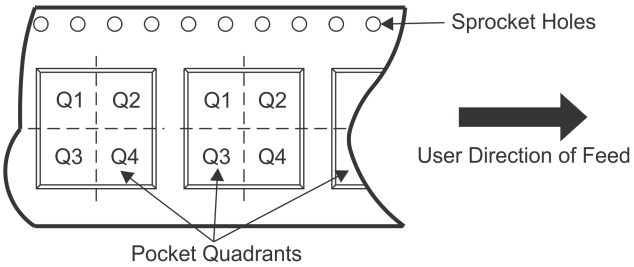

*All dimensions are nominal

Device	Package Type	Package Drawing	Pins	SPQ	Reel Diameter (mm)	Reel Width W1 (mm)	A0 (mm)	B0 (mm)	K0 (mm)	P1 (mm)	W (mm)	Pin1 Quadrant
LM124DR	SOIC	D	14	2500	330.0	16.4	6.5	9.0	2.1	8.0	16.0	Q1
LM224ADR	SOIC	D	14	2500	330.0	16.4	6.5	9.0	2.1	8.0	16.0	Q1
LM224ADR	SOIC	D	14	2500	330.0	16.4	6.5	9.0	2.1	8.0	16.0	Q1
LM224DR	SOIC	D	14	2500	330.0	16.4	6.5	9.0	2.1	8.0	16.0	Q1
LM224DRG4	SOIC	D	14	2500	330.0	16.4	6.5	9.0	2.1	8.0	16.0	Q1
LM224KADR	SOIC	D	14	2500	330.0	16.4	6.5	9.0	2.1	8.0	16.0	Q1
LM224KDR	SOIC	D	14	2500	330.0	16.4	6.5	9.0	2.1	8.0	16.0	Q1
LM2902DR	SOIC	D	14	2500	330.0	16.4	6.5	9.0	2.1	8.0	16.0	Q1
LM2902DR	SOIC	D	14	2500	330.0	16.4	6.5	9.0	2.1	8.0	16.0	Q1
LM2902DRG4	SOIC	D	14	2500	330.0	16.4	6.5	9.0	2.1	8.0	16.0	Q1
LM2902DRG4	SOIC	D	14	2500	330.0	16.4	6.5	9.0	2.1	8.0	16.0	Q1
LM2902KAVQPWR	TSSOP	PW	14	2000	330.0	12.4	6.9	5.6	1.6	8.0	12.0	Q1
LM2902KDR	SOIC	D	14	2500	330.0	16.4	6.5	9.0	2.1	8.0	16.0	Q1
LM2902KNSR	SO	NS	14	2000	330.0	16.4	8.2	10.5	2.5	12.0	16.0	Q1
LM2902KPWR	TSSOP	PW	14	2000	330.0	12.4	6.9	5.6	1.6	8.0	12.0	Q1
LM2902KVQPWR	TSSOP	PW	14	2000	330.0	12.4	6.9	5.6	1.6	8.0	12.0	Q1
LM2902NSR	SO	NS	14	2000	330.0	16.4	8.2	10.5	2.5	12.0	16.0	Q1
LM2902PWR	TSSOP	PW	14	2000	330.0	12.4	6.9	5.6	1.6	8.0	12.0	Q1

Device	Package Type	Package Drawing	Pins	SPQ	Reel Diameter (mm)	Reel Width W1 (mm)	A0 (mm)	B0 (mm)	K0 (mm)	P1 (mm)	W (mm)	Pin1 Quadrant
LM2902PWR	TSSOP	PW	14	2000	330.0	12.4	7.0	5.6	1.6	8.0	12.0	Q1
LM2902PWRG3	TSSOP	PW	14	2000	330.0	12.4	7.0	5.6	1.6	8.0	12.0	Q1
LM2902PWRG4	TSSOP	PW	14	2000	330.0	12.4	6.9	5.6	1.6	8.0	12.0	Q1
LM324ADBR	SSOP	DB	14	2000	330.0	16.4	8.2	6.6	2.5	12.0	16.0	Q1
LM324ADR	SOIC	D	14	2500	330.0	16.4	6.5	9.0	2.1	8.0	16.0	Q1
LM324ADRG4	SOIC	D	14	2500	330.0	16.4	6.5	9.0	2.1	8.0	16.0	Q1
LM324ANSR	SO	NS	14	2000	330.0	16.4	8.2	10.5	2.5	12.0	16.0	Q1
LM324APWR	TSSOP	PW	14	2000	330.0	12.4	7.0	5.6	1.6	8.0	12.0	Q1
LM324APWR	TSSOP	PW	14	2000	330.0	12.4	6.9	5.6	1.6	8.0	12.0	Q1
LM324APWRG4	TSSOP	PW	14	2000	330.0	12.4	6.9	5.6	1.6	8.0	12.0	Q1
LM324DR	SOIC	D	14	2500	330.0	16.4	6.55	9.05	2.1	8.0	16.0	Q1
LM324DR	SOIC	D	14	2500	330.0	16.4	6.5	9.0	2.1	8.0	16.0	Q1
LM324DR	SOIC	D	14	2500	330.0	16.4	6.5	9.0	2.1	8.0	16.0	Q1
LM324DRG4	SOIC	D	14	2500	330.0	16.4	6.5	9.0	2.1	8.0	16.0	Q1
LM324DRG4	SOIC	D	14	2500	330.0	16.4	6.5	9.0	2.1	8.0	16.0	Q1
LM324KADR	SOIC	D	14	2500	330.0	16.4	6.5	9.0	2.1	8.0	16.0	Q1
LM324KANSR	SO	NS	14	2000	330.0	16.4	8.2	10.5	2.5	12.0	16.0	Q1
LM324KAPWR	TSSOP	PW	14	2000	330.0	12.4	6.9	5.6	1.6	8.0	12.0	Q1
LM324KDR	SOIC	D	14	2500	330.0	16.4	6.5	9.0	2.1	8.0	16.0	Q1
LM324KNSR	SO	NS	14	2000	330.0	16.4	8.2	10.5	2.5	12.0	16.0	Q1
LM324KPWR	TSSOP	PW	14	2000	330.0	12.4	6.9	5.6	1.6	8.0	12.0	Q1
LM324NSR	SO	NS	14	2000	330.0	16.4	8.2	10.5	2.5	12.0	16.0	Q1
LM324PWR	TSSOP	PW	14	2000	330.0	12.4	6.9	5.6	1.6	8.0	12.0	Q1
LM324PWR	TSSOP	PW	14	2000	330.0	12.4	7.0	5.6	1.6	8.0	12.0	Q1
LM324PWRG3	TSSOP	PW	14	2000	330.0	12.4	7.0	5.6	1.6	8.0	12.0	Q1
LM324PWRG4	TSSOP	PW	14	2000	330.0	12.4	6.9	5.6	1.6	8.0	12.0	Q1

TAPE AND REEL BOX DIMENSIONS

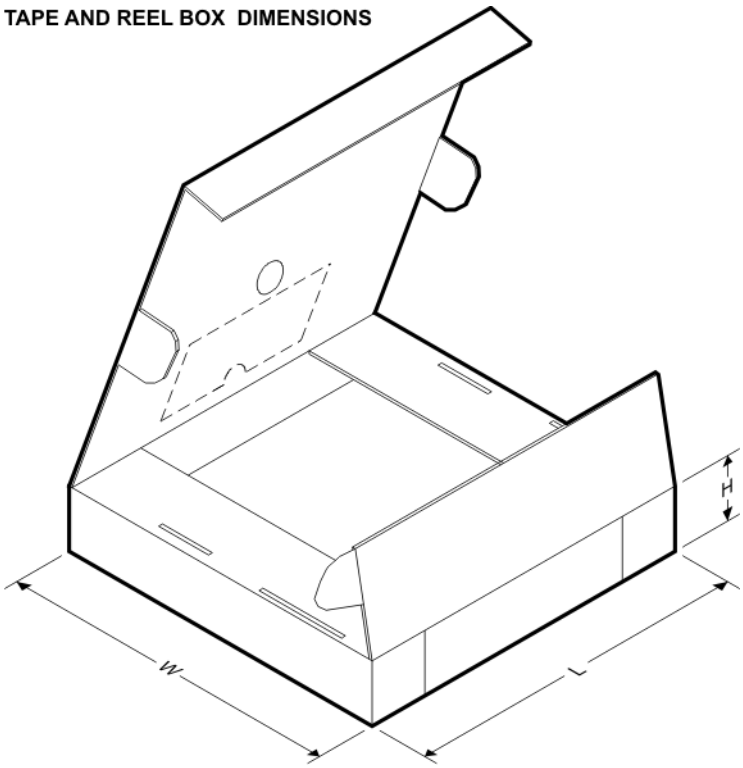

*All dimensions are nominal

Device	Package Type	Package Drawing	Pins	SPQ	Length (mm)	Width (mm)	Height (mm)
LM124DR	SOIC	D	14	2500	367.0	367.0	38.0
LM224ADR	SOIC	D	14	2500	367.0	367.0	38.0
LM224ADR	SOIC	D	14	2500	333.2	345.9	28.6
LM224DR	SOIC	D	14	2500	367.0	367.0	38.0
LM224DRG4	SOIC	D	14	2500	367.0	367.0	38.0
LM224KADR	SOIC	D	14	2500	367.0	367.0	38.0
LM224KDR	SOIC	D	14	2500	367.0	367.0	38.0
LM2902DR	SOIC	D	14	2500	333.2	345.9	28.6
LM2902DR	SOIC	D	14	2500	367.0	367.0	38.0
LM2902DRG4	SOIC	D	14	2500	367.0	367.0	38.0
LM2902DRG4	SOIC	D	14	2500	333.2	345.9	28.6
LM2902KAVQPWR	TSSOP	PW	14	2000	367.0	367.0	35.0
LM2902KDR	SOIC	D	14	2500	367.0	367.0	38.0
LM2902KNSR	SO	NS	14	2000	367.0	367.0	38.0
LM2902KPWR	TSSOP	PW	14	2000	367.0	367.0	35.0
LM2902KVQPWR	TSSOP	PW	14	2000	367.0	367.0	35.0
LM2902NSR	SO	NS	14	2000	367.0	367.0	38.0
LM2902PWR	TSSOP	PW	14	2000	367.0	367.0	35.0
LM2902PWR	TSSOP	PW	14	2000	364.0	364.0	27.0
LM2902PWRG3	TSSOP	PW	14	2000	364.0	364.0	27.0

Device	Package Type	Package Drawing	Pins	SPQ	Length (mm)	Width (mm)	Height (mm)
LM2902PWRG4	TSSOP	PW	14	2000	367.0	367.0	35.0
LM324ADBR	SSOP	DB	14	2000	367.0	367.0	38.0
LM324ADR	SOIC	D	14	2500	367.0	367.0	38.0
LM324ADRG4	SOIC	D	14	2500	367.0	367.0	38.0
LM324ANSR	SO	NS	14	2000	367.0	367.0	38.0
LM324APWR	TSSOP	PW	14	2000	364.0	364.0	27.0
LM324APWR	TSSOP	PW	14	2000	367.0	367.0	35.0
LM324APWRG4	TSSOP	PW	14	2000	367.0	367.0	35.0
LM324DR	SOIC	D	14	2500	385.0	388.0	194.0
LM324DR	SOIC	D	14	2500	333.2	345.9	28.6
LM324DR	SOIC	D	14	2500	367.0	367.0	38.0
LM324DRG4	SOIC	D	14	2500	367.0	367.0	38.0
LM324DRG4	SOIC	D	14	2500	333.2	345.9	28.6
LM324KADR	SOIC	D	14	2500	367.0	367.0	38.0
LM324KANSR	SO	NS	14	2000	367.0	367.0	38.0
LM324KAPWR	TSSOP	PW	14	2000	367.0	367.0	35.0
LM324KDR	SOIC	D	14	2500	367.0	367.0	38.0
LM324KNSR	SO	NS	14	2000	367.0	367.0	38.0
LM324KPWR	TSSOP	PW	14	2000	367.0	367.0	35.0
LM324NSR	SO	NS	14	2000	367.0	367.0	38.0
LM324PWR	TSSOP	PW	14	2000	367.0	367.0	35.0
LM324PWR	TSSOP	PW	14	2000	364.0	364.0	27.0
LM324PWRG3	TSSOP	PW	14	2000	364.0	364.0	27.0
LM324PWRG4	TSSOP	PW	14	2000	367.0	367.0	35.0

J (R–GDIP–T**) CERAMIC DUAL IN–LINE PACKAGE

14 LEADS SHOWN

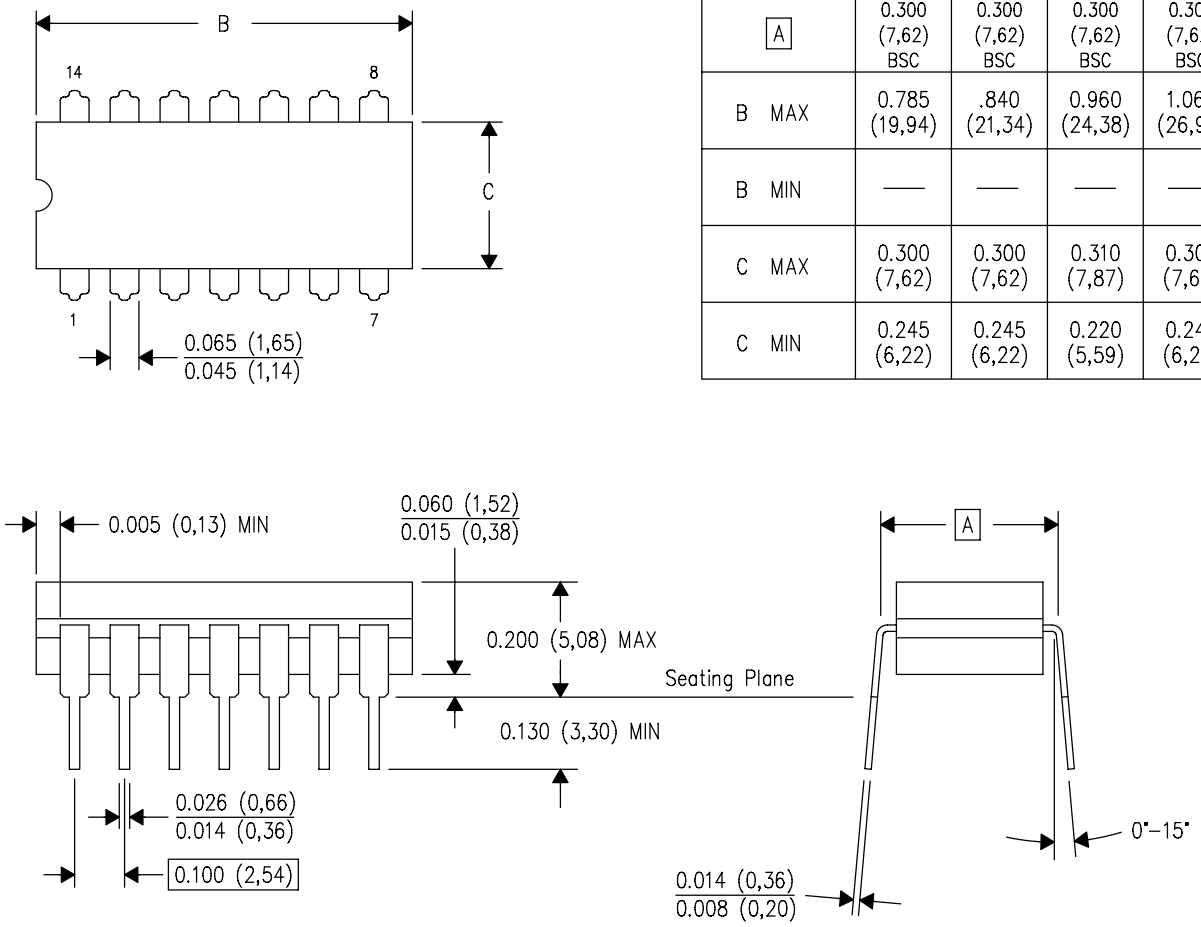

DIM \ PINS **	14	16	18	20
A	0.300 (7,62) BSC	0.300 (7,62) BSC	0.300 (7,62) BSC	0.300 (7,62) BSC
B MAX	0.785 (19,94)	.840 (21,34)	0.960 (24,38)	1.060 (26,92)
B MIN	—	—	—	—
C MAX	0.300 (7,62)	0.300 (7,62)	0.310 (7,87)	0.300 (7,62)
C MIN	0.245 (6,22)	0.245 (6,22)	0.220 (5,59)	0.245 (6,22)

4040083/F 03/03

NOTES:
- A. All linear dimensions are in inches (millimeters).
- B. This drawing is subject to change without notice.
- C. This package is hermetically sealed with a ceramic lid using glass frit.
- D. Index point is provided on cap for terminal identification only on press ceramic glass frit seal only.
- E. Falls within MIL STD 1835 GDIP1–T14, GDIP1–T16, GDIP1–T18 and GDIP1–T20.

W (R–GDFP–F14) CERAMIC DUAL FLATPACK

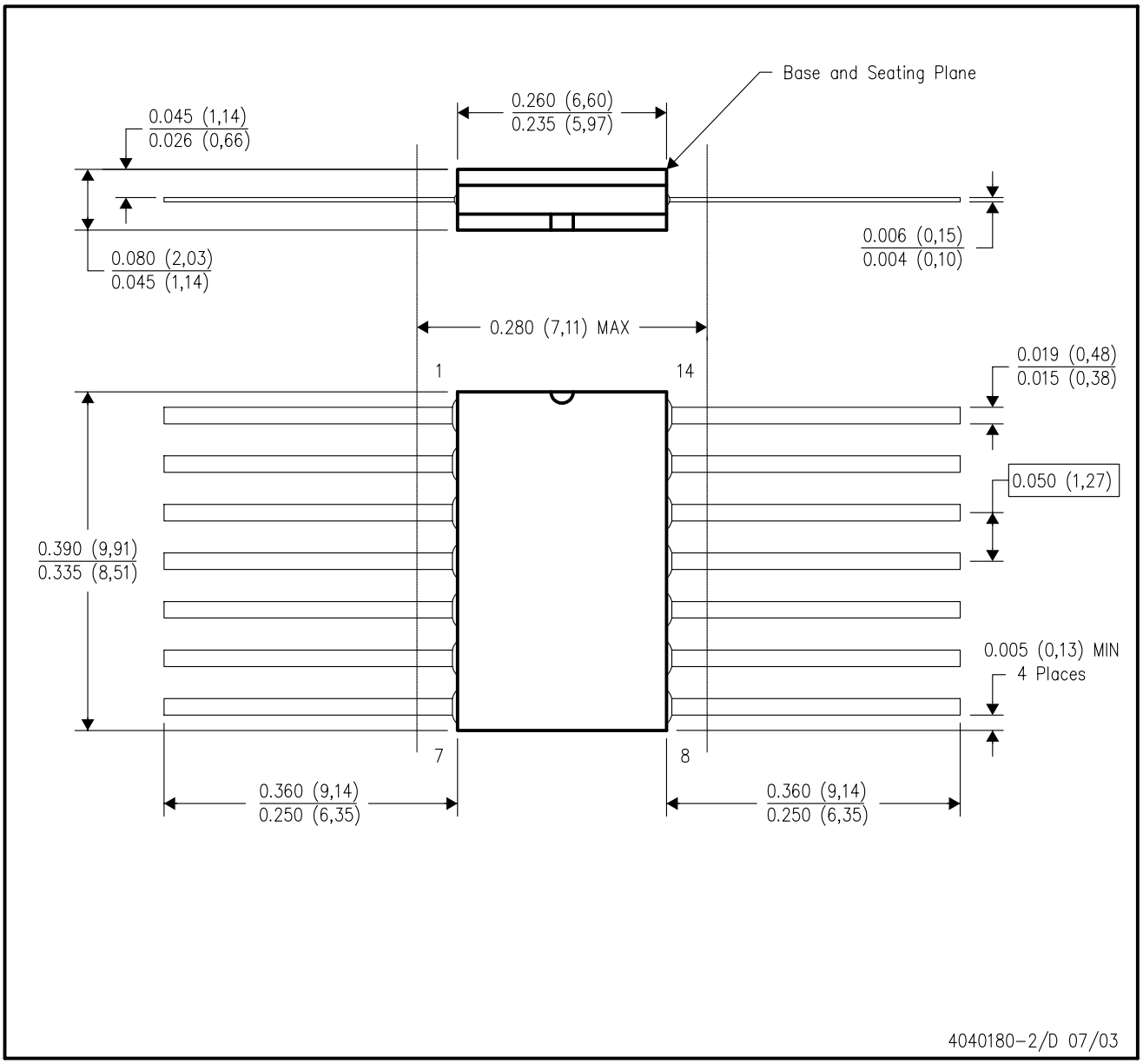

NOTES:
A. All linear dimensions are in inches (millimeters).
B. This drawing is subject to change without notice.
C. This package can be hermetically sealed with a ceramic lid using glass frit.
D. Index point is provided on cap for terminal identification only.
E. Falls within MIL STD 1835 GDFP1–F14 and JEDEC MO–092AB

FK (S–CQCC–N**) LEADLESS CERAMIC CHIP CARRIER

28 TERMINAL SHOWN

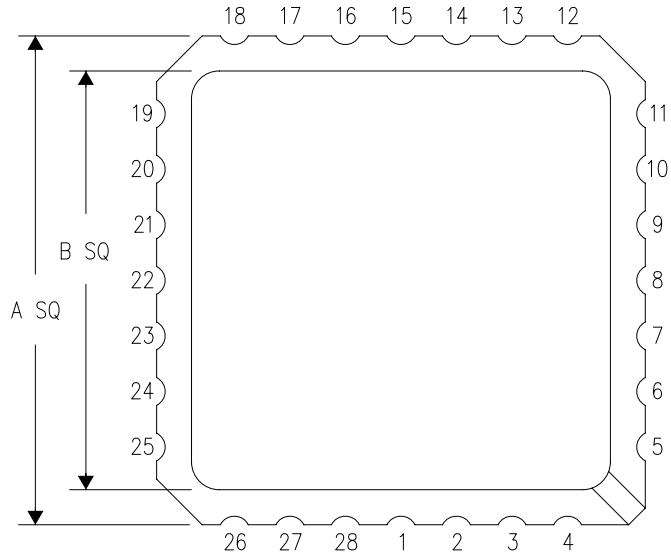

NO. OF TERMINALS **	A		B	
	MIN	MAX	MIN	MAX
20	0.342 (8,69)	0.358 (9,09)	0.307 (7,80)	0.358 (9,09)
28	0.442 (11,23)	0.458 (11,63)	0.406 (10,31)	0.458 (11,63)
44	0.640 (16,26)	0.660 (16,76)	0.495 (12,58)	0.560 (14,22)
52	0.740 (18,78)	0.761 (19,32)	0.495 (12,58)	0.560 (14,22)
68	0.938 (23,83)	0.962 (24,43)	0.850 (21,6)	0.858 (21,8)
84	1.141 (28,99)	1.165 (29,59)	1.047 (26,6)	1.063 (27,0)

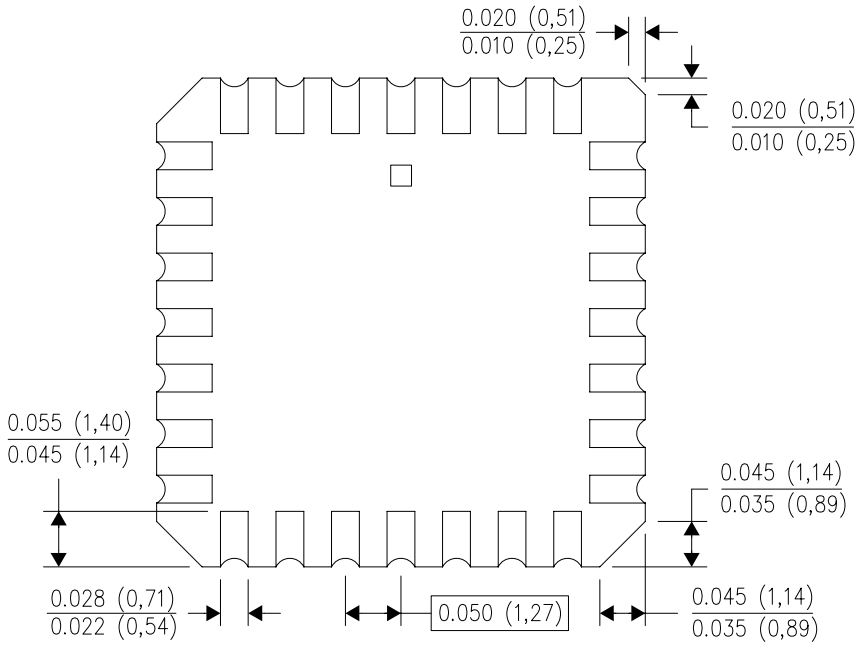

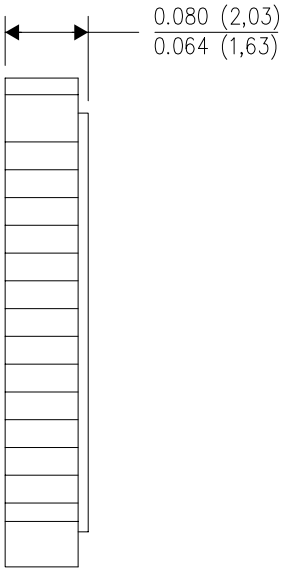

4040140/D 01/11

NOTES:
A. All linear dimensions are in inches (millimeters).
B. This drawing is subject to change without notice.
C. This package can be hermetically sealed with a metal lid.
D. Falls within JEDEC MS–004

D (R–PDSO–G14) PLASTIC SMALL OUTLINE

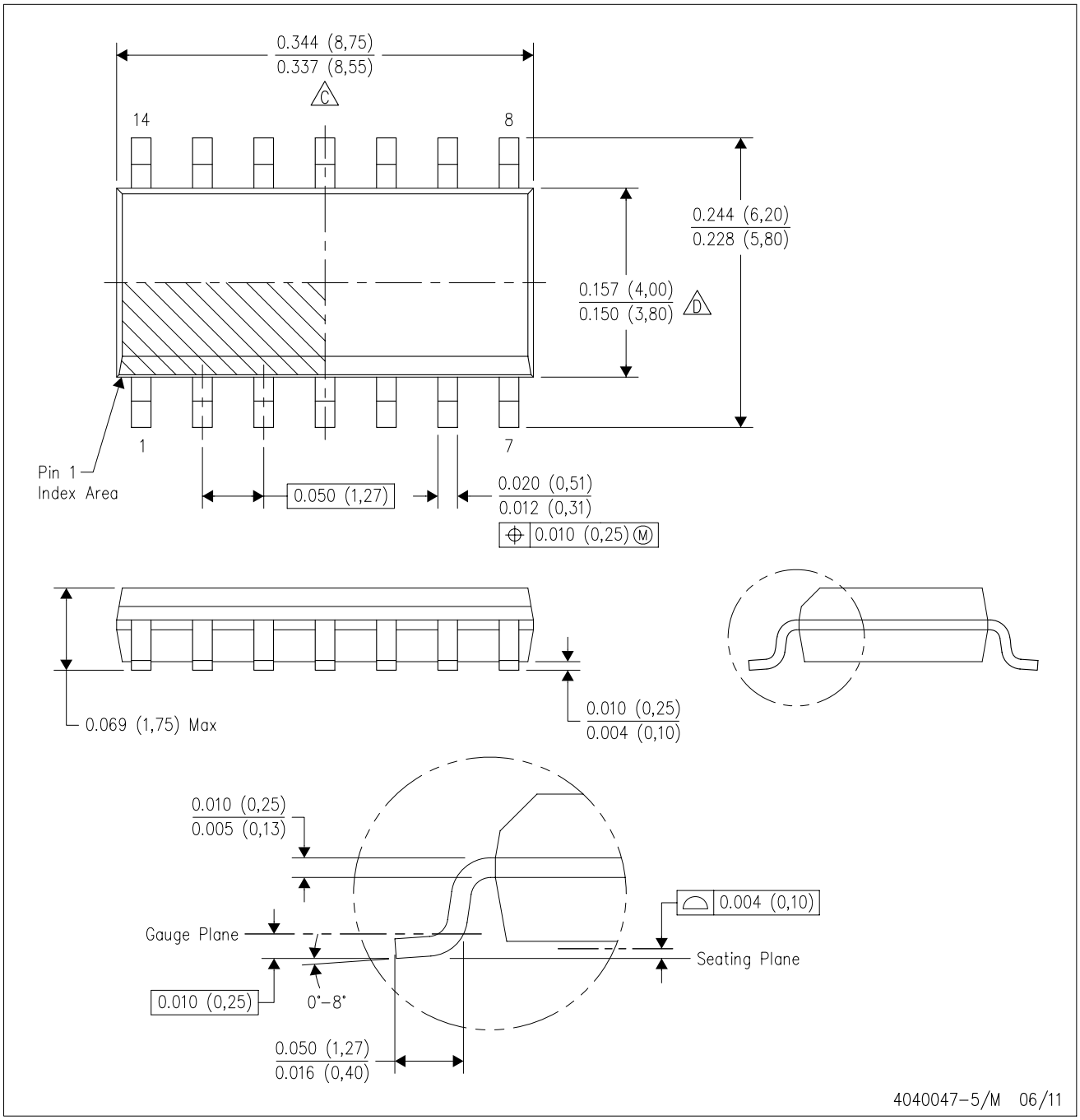

NOTES:
A. All linear dimensions are in inches (millimeters).
B. This drawing is subject to change without notice.
C. Body length does not include mold flash, protrusions, or gate burrs. Mold flash, protrusions, or gate burrs shall not exceed 0.006 (0,15) each side.
D. Body width does not include interlead flash. Interlead flash shall not exceed 0.017 (0,43) each side.
E. Reference JEDEC MS–012 variation AB.

D (R–PDSO–G14) PLASTIC SMALL OUTLINE

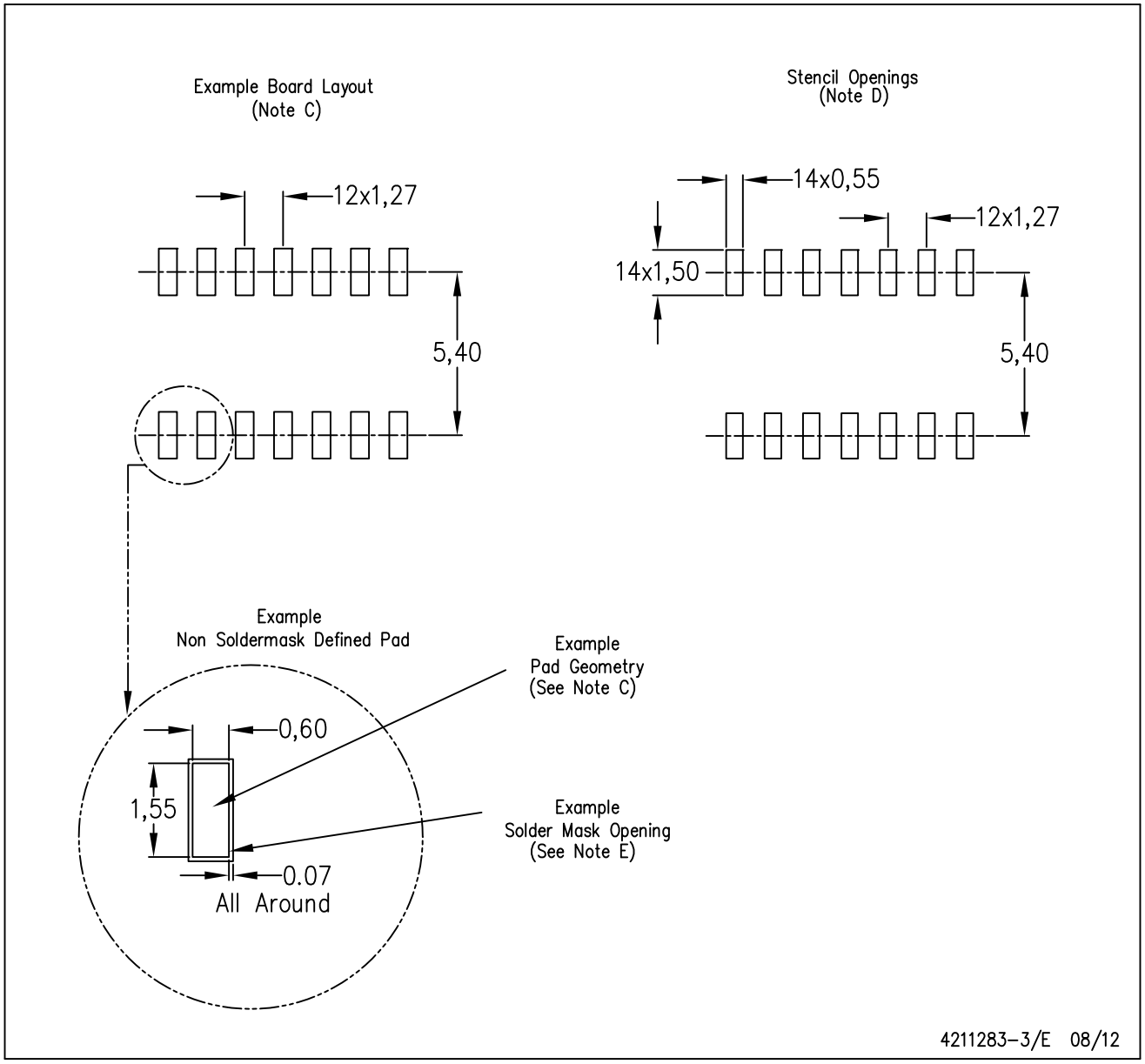

NOTES:
A. All linear dimensions are in millimeters.
B. This drawing is subject to change without notice.
C. Publication IPC–7351 is recommended for alternate designs.
D. Laser cutting apertures with trapezoidal walls and also rounding corners will offer better paste release. Customers should contact their board assembly site for stencil design recommendations. Refer to IPC–7525 for other stencil recommendations.
E. Customers should contact their board fabrication site for solder mask tolerances between and around signal pads.

PW (R–PDSO–G14) PLASTIC SMALL OUTLINE

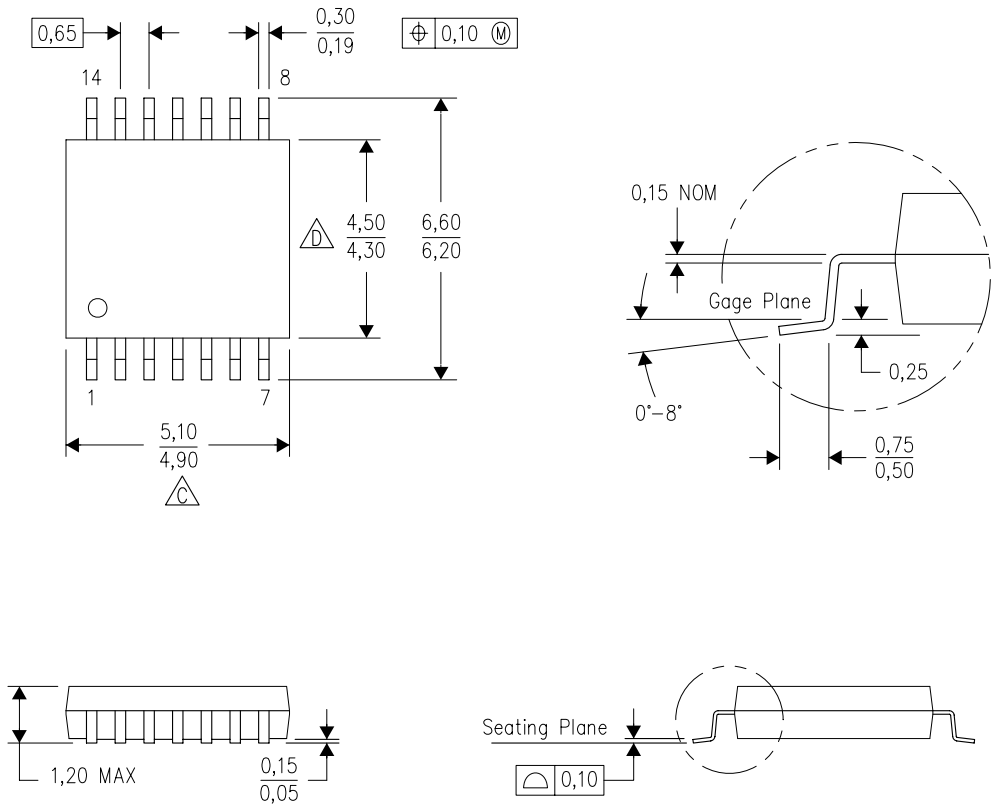

NOTES:
A. All linear dimensions are in millimeters. Dimensioning and tolerancing per ASME Y14.5M–1994.
B. This drawing is subject to change without notice.
C. Body length does not include mold flash, protrusions, or gate burrs. Mold flash, protrusions, or gate burrs shall not exceed 0,15 each side.
D. Body width does not include interlead flash. Interlead flash shall not exceed 0,25 each side.
E. Falls within JEDEC MO–153

PW (R–PDSO–G14) PLASTIC SMALL OUTLINE

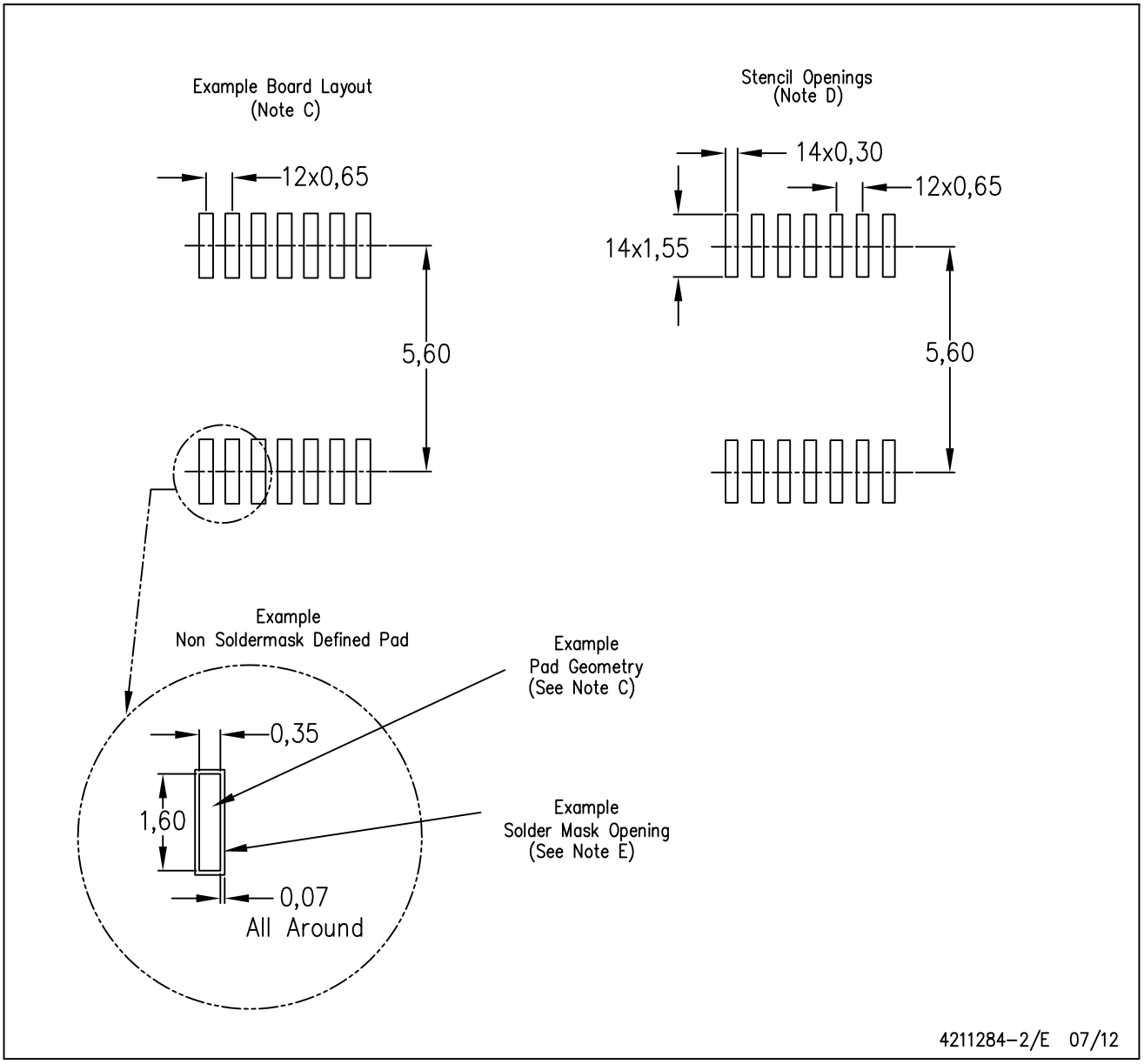

NOTES:
A. All linear dimensions are in millimeters.
B. This drawing is subject to change without notice.
C. Publication IPC–7351 is recommended for alternate designs.
D. Laser cutting apertures with trapezoidal walls and also rounding corners will offer better paste release. Customers should contact their board assembly site for stencil design recommendations. Refer to IPC–7525 for other stencil recommendations.
E. Customers should contact their board fabrication site for solder mask tolerances between and around signal pads.

MECHANICAL DATA

NS (R-PDSO-G)** **PLASTIC SMALL-OUTLINE PACKAGE**

14-PINS SHOWN

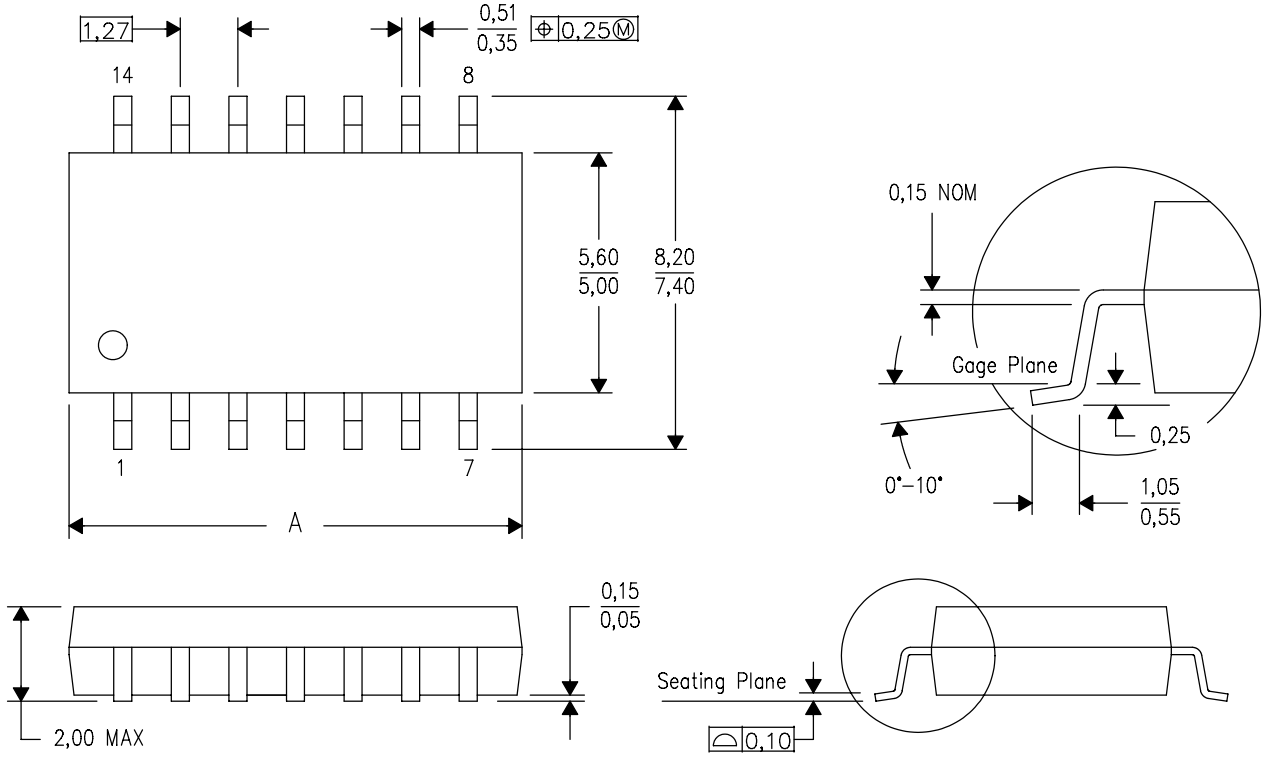

DIM \ PINS **	14	16	20	24
A MAX	10,50	10,50	12,90	15,30
A MIN	9,90	9,90	12,30	14,70

4040062/C 03/03

NOTES:
A. All linear dimensions are in millimeters.
B. This drawing is subject to change without notice.
C. Body dimensions do not include mold flash or protrusion, not to exceed 0,15.

DB (R-PDSO-G)** **PLASTIC SMALL-OUTLINE**

28 PINS SHOWN

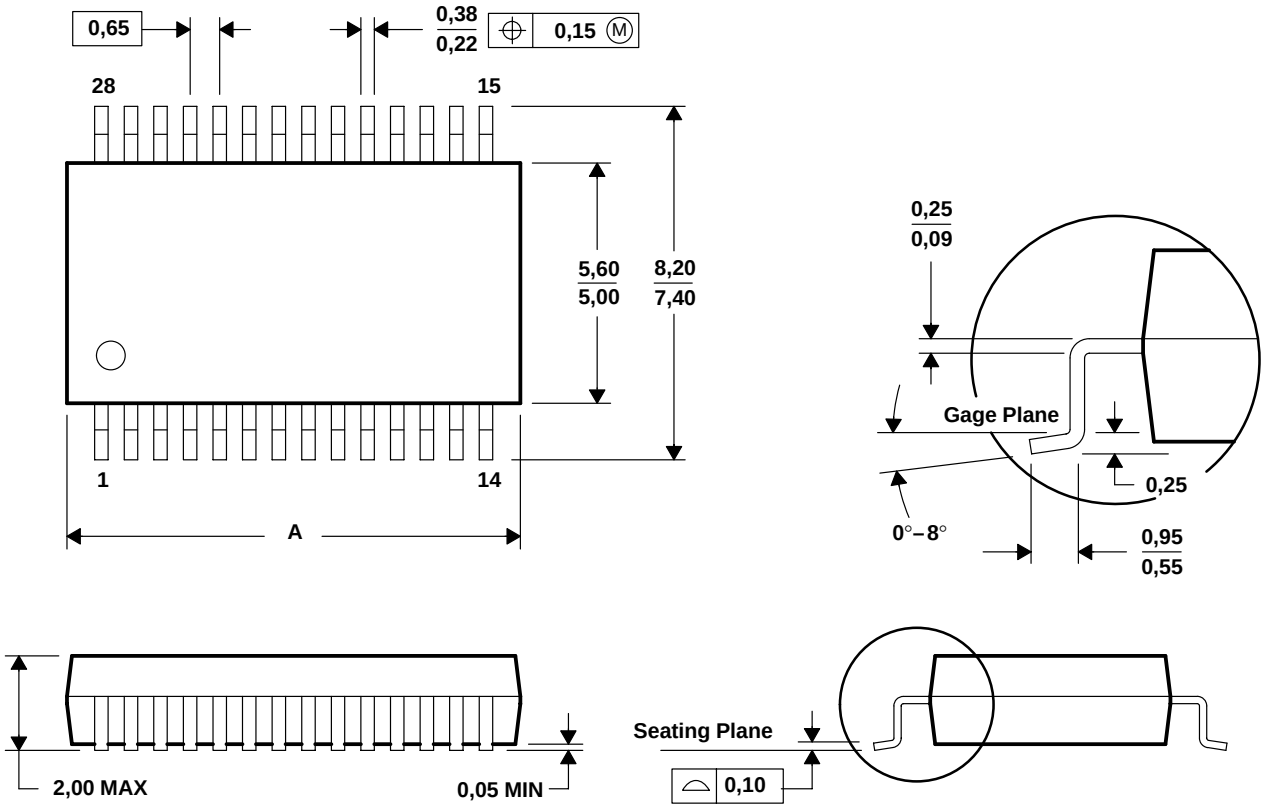

DIM \ PINS **	14	16	20	24	28	30	38
A MAX	6,50	6,50	7,50	8,50	10,50	10,50	12,90
A MIN	5,90	5,90	6,90	7,90	9,90	9,90	12,30

4040065 /E 12/01

NOTES: A. All linear dimensions are in millimeters.
B. This drawing is subject to change without notice.
C. Body dimensions do not include mold flash or protrusion not to exceed 0,15.
D. Falls within JEDEC MO-150